Acknowledgements

In publishing this report, ODMH recognizes the many provider agency and board staff and others who have devoted their time and energy to developing an effective implementation strategy for the statewide Outcomes System. We will never know what sacrifices they have made personally and in their own workplaces to support this effort. But we can hope their work will be a service to other local systems that will find the products useful in supplementing their own implementation efforts. We are, however, certain that the Outcomes System as a whole would be lacking in its integrity, value and local flavor without their active participation.

In particular, we would like to acknowledge the following people and organizations for their contributions to this effort: Michael Flora, Susan Keckler, Reneé Kopache, Thomas Lambric, Gary Mercer, Ron Ravneberg, Joyce Semeraro, Ellen Stukenberg, Pam Woodward and the Stark County Community Mental Health Board.

Using an Outcomes-Based Model to Re-engineer Your Organization

The Ohio Department of Mental Health
30 East Broad Street
Columbus, Ohio 43266-0414

Additional Information

You can obtain additional information about the Ohio Mental Health Consumer Outcomes System from the project web site:
http://www.mh.state.oh.us/initiatives/outcomes/outcomes.html

Answers to other questions can be addressed to any of the following at the Ohio Department of Mental Health:
Dee Roth - (614) 466-8651
Leslie Brower - (614) 466-7450
Paul Schreur - (614) 466-7450
Stacy Doklovic - (614) 752-9311
Geoff Grove - (614) 644-7840

TABLE OF CONTENTS

First Thoughts 4
Focus 5
Organization of the Manual 6

Setting the Stage 8
The Clinical Nexus 8
Mental Health Recovery 9
Outcomes & Mental Health 14
The Outcomes System: A Tool for Shaping Consumer Care 20

Consumer-Centered Management 25
The Mental Health Mission in Ohio 25
The Mental Health Marketplace 26
Implications for Process Re-engineering 27
The Re-engineering Project 28

Components of Clinical Re-engineering 29
The Realm of Clinical Re-engineering 30
Re-engineering Scope 31
Components of a Consumer-Centered System 32
Recurring Re-engineering Themes 35

Case Studies in Clinical Re-engineering 42
Outcomes-Driven Clinical Reorganization 42
Integrating Initiatives Into Clinical Flow 45
Implementing a Cluster-Based Planning System 47
Developing a Recovery Self-Assessment Tool 51
Creating Consumer-Centered Intake Scheduling 55

Symptoms of the Need to Re-engineer 58
Why Re-engineer? — Chaos to Order 58
Seven Sinister Symptoms of a Seriously Slipping System 59

Gearing Up for Re-engineering 65
Crisis: Danger or Opportunity? 65
Fixes for Symptoms or Problems? 66
Re-engineering the Flow of Information 66
Taking the Information Lead 68
Re-engineering & MACSIS: A Brief Window of Opportunity 69
Evaluating the Costs of Re-engineering 70

Re-engineering Project Essentials 72
Sine Qua Non 72
Three Essentials for Project Success 72
Stop Chasing Regulations 73
Tactics for Project Implementation 75
The Re-engineering "Danger Zone" 79
Frequently Asked Questions 81

Helpful Re-engineering Tools 86
Organizational Goal Setting: A Results-Based Approach 87
When Things Go Wrong: Analyzing Staff Performance Problems . .97

Re-engineering Teams 103
Re-engineering Steering Committee 103
Re-engineering Functional Teams 104

Implementing the Ohio Consumer Outcomes System in a Culturally Competent Context 113

FIRST THOUGHTS

I have served you better, if upon departing, you can follow the path rather than follow the guide.

Unknown

Organizational processes in most mental health organizations often result from a large number of arbitrary decisions, made by a variety of people, over an extended period of time, in response to multiple situations, using then-available technology. In this document, you will learn ways to review and evaluate those prior decisions to determine what changes need to be made to re-engineer your organization to achieve outcomes for consumer recovery.

It's important in this context to understand what the term "re-engineering" means and what it does not mean. First, re-engineering does not mean that you have to scrap everything you do and start over. Re-engineering is not intended to:

- indict either the current processes or those who produced them;
- second-guess well-made decisions of the past that no longer stand up under the changed priorities of the present; or
- criticize the organization and how it has evolved.

Re-engineering does mean that you should revisit the key decisions that shaped your current organizational processes in the light of today's needs and the pressing need for effective decision making and consumer recovery. Re-engineering is intended to:

- understand and place in context both the strengths and weaknesses of the current system;
- trace the many working relationships that run through the organization;
- evaluate what the organization has become;
- map the current organizational information and decision flows, not with an eye to replicating them, but in order to better build new ones; and
- create more effective and efficient systems and processes that can facilitate consumer recovery and carry the organization into the future.

FIRST THOUGHTS

Focus

So what is Using an Outcomes-Based Model to Re-engineer Your Organization really about?

It is about **Clinically-Based Re-engineering** - the process of making changes to your organization that will facilitate consumer recovery. The document does not concentrate on the "clinical specifics" of re-engineering; rather, it focuses on methods designed to get decision-makers to understand clinically-based re-engineering. Once that's accomplished, it outlines processes to help them mobilize their organizations to implement an outcomes-based approach.

Is it about **Outcomes**? No. Although the genesis of this document was the Ohio Mental Health Consumer Outcomes Initiative and the opportunities it presents for moving from process regulation to an outcomes-oriented approach.

Is it about the **Clinical Process**? No, again. But it is about how the clinical process is at the heart of what mental health organizations do. The clinical process is the reason they exist, and it's the process around which they can (and should) structure everything else we do.

Is it about how to use outcomes in **Treatment Planning**? No, again (again). While it does not elaborate on the myriad of ways outcomes can help with the choice of treatment interventions, the document does center around the fact that such a link between outcomes and treatment choice is at the core of consumer recovery.

Finally, is it a **"Cookbook"** with step-by-step instructions? No. Although it contains a number of specific techniques and examples, the manual isn't designed to simply be a list of re-engineering instructions; it's intended to be an overview of principles, goals, obstacles and techniques that, taken collectively and internalized, can equip the reader with the primary tools required to undertake a clinically-based re-engineering project.

Organization of the Manual

Using an Outcomes-Based Model to Re-engineer Your Organization is divided into several chapters to help the reader: (1) understand the principles underlying a clinically-based re-engineering project; (2) assess his or her own organization's need for such a re-engineering project; (3) learn some helpful techniques for clinically-based re-engineering; and (4) structure teams to facilitate and ensure the success of the project.

Specifically, the chapters are as follows:

Setting the Stage - The chapter begins with a discussion of the clinical partnership required for success in a consumer-centered organization.

The second part of the chapter describes the philosophy of consumer recovery and outlines a series of guiding principles for the Recovery Process Model.

The third section provides background information about the Ohio Mental Health Consumer Outcomes Initiative and Values-Based Decision-Making to create a frame of reference for understanding the other materials in the manual.

The chapter concludes with a description of the flow of outcomes information through the organization, followed with a description of the roles and responsibilities of the wide range of participants in a well-engineered outcomes-based clinical process.

Consumer-Centered Management - This chapter links all operations to the organization's mission and vision. The goal is twofold: (1) to get the reader to understand that the consumer is the reason the organization exists; and (2) to demonstrate that organizing around the consumer's recovery is not inconsistent with good operations, and is, in fact, the optimal approach for long-term organizational success.

Components of Clinical Re-engineering - This chapter reinforces the clinical process as the core of the re-engineering process. The all-encompassing scope of clinical re-engineering is further defined. The chapter then identifies six major system components of a consumer-centered system and their consistent themes - the use of performance/quality measures; feedback mechanisms; and consumer and family involvement.

Case Studies in Clinical Re-engineering - This chapter presents a series of "real-world" examples where mental health organizations have undertaken consumer-centered re-engineering projects.

Symptoms of the Need to Re-engineer - This chapter identifies a series of symptoms exhibited by organizations in need of re-engineering and places a re-engineering effort in the context of the issues experienced by administrators and other decision-makers.

Gearing Up for Re-engineering - How extensive should a re-engineering effort be? This chapter encourages looking to the organization as a whole, and avoiding the reactionary process of fixing "symptoms." Subsequent sections discuss information flow, taking the information lead, and the relationship between re-engineering and MACSIS. In addition, the reader is encouraged to consider both the costs of re-engineering and (possibly more important) the costs of not re-engineering.

Re-engineering Project Essentials - Organizational re-engineering is a major undertaking, and the people involved in the project can use all the help they can get. This chapter addresses a series of issues that can facilitate a re-engineering project, maximize the opportunities for success, and minimize organizational culture shock.

Helpful Re-engineering Tools - This chapter describes detailed models to help the reader: (1) facilitate the setting of clinically-based organizational objectives; and (2) analyze performance problems that can impede the re-engineering effort.

Re-engineering Teams - Re-engineering draws upon the skills of a variety of staff. The final chapter outlines a structure of re-engineering teams to address varied parts of the project. Principles for team operation and individual tasks for each team are defined.

SETTING THE STAGE

The materials in this manual describe a process of re-engineering organizational processes that places the clinical process in general and the Ohio Mental Health Consumer Outcomes Initiative in particular, at the center of the re-engineering efforts. The model is based upon several assumptions about re-engineered processes:

Consumer-Centered - They should focus primarily on the consumer (and not the organization).

Recovery-Focused - They should support the Recovery Process Model anD Emerging Best Practices.

Strategically-Focused - They should provide information that supports decision-making at the strategic level.

Organization-Wide Implementation - They should encompass all components of its organization, including clinical, administrative, fiscal and operational.

Partners in the Clinical Process

Nexus: 1. A connection, tie, or link between individuals or a group, members of a series, etc. 2. The group or series connected.

Mental health organizations exist for one purpose - to provide services to people in need. The clinical process, however, extends far beyond the simple consumer-clinician relationship. In fact it involves almost everyone who works closely with the consumer, both inside and outside the mental health organization, including:

Consumers	Clinicians	Supervisors
Support Staff	Administrators/Managers	QI/Compliance Staff
Support Staff (MIS)	Consumer Family Members	

The nexus of the clinical process is a working partnership of the above groups, where a care management plan that reflects the diversity, strengths, abilities and needs of the consumer is negotiated, implemented, and evaluated.

Each of the above parties has an important role to play in the clinical process. Those roles, in turn, only produce real results that enhance consumer recovery when: (1) each party respects the rights, abilities and uniqueness of the others; (2)

there is sufficient time to allow it to be an iterative process; (3) everyone is working in concert with each other; and (4) all of the parties are supported by appropriate organizational policies, procedures and materials.

Mental Health Recovery

The notion of recovery reflects renewed optimism about the outcomes of mental illness, including that achieved through an individual's own self-care efforts, and the opportunities open to persons with mental illness to participate to the full extent of their interest in the community of their choice.

Surgeon General

Recovery is not the same thing as being cured ... Recovery is a process not an endpoint or a destination. Recovery is an attitude, a way of approaching the day and facing the challenges. Being in recovery means recognizing limitations in order to see the limitless possibilities. Recovery means being in control. Recovery is the urge, the wrestle, and the resurrection. Recovery is a matter of rising on lopped limbs to a new life. Recovery is not a linear process marked by successive accomplishments. The recovery process is more accurately described as a series of small beginnings and very small steps. Professionals cannot manufacture the spirit of recovery and give it to consumers. Recovery cannot be forced or willed. However, environments can be created in which the recovery process can be nurtured like a tender and precious seedling. To recover, psychiatrically disabled persons must be willing to try and fail, and try again.

Patricia E. Deegan

It is a deeply personal, unique process of changing one's attitudes, values, feelings, goals, skills, and/or roles. It is a way of living a satisfying, hopeful, and contributing life even with limitations caused by the illness. Recovery involves the development of new meaning and purpose in one's life as one grows beyond the catastrophic effects of mental illness.

William Anthony

Recovery in a major mental illness does not usually mean 'cure' or return to the premorbid state. Rather, it means a kind of readaptation to the illness that allows life to go forward in a meaningful way. The adaptive response is not an end state, it is a process in which the person is continually trying to maximize the fit between his or her needs and the environment.

Agnes Hatfield and Harriette Lefley

For too long, mental patients have been faceless, voiceless people. We have been thought of, at worst as subhuman monsters, or at best, as pathetic cripples, who might be able to hold down menial jobs and eke out meager existences, given constant professional support. Not only have others thought of us in this stereotyped way, we have believed it ourselves ... [but now, we have begun to] see ourselves for what we are - a diverse group of people, with strengths and weaknesses, abilities and needs, and ideas of our own.

Judi Chamberlin On Our Own (1988)

It is our duty as men and women to proceed as though the limits of our abilities do not exist.

Pierre Teilhard de Chardin

What is Mental Health Recovery?

The Ohio Department of Mental Health (ODMH) defines mental health recovery as:

> "A personal process of overcoming the negative
> impact of a psychiatric disability despite its continued presence."

ODMH has been a leader in the efforts to promote mental health recovery in Ohio and the nation. In 1993, the Department began a series of community forums and dialogues to discover and define mental health recovery. These efforts were conceived and conducted with input from consumers, family members/significant others, mental health providers and administrators through the Community Support Program (CSP) Advisory Committee to the Department. A sub-committee of the CSP Advisory Committee developed a report of the process and future of mental health recovery in Ohio. This process became a common rallying point for the mental health constituent groups, galvanizing them around a common theme of "hope and self-determination."

The Recovery Process Model

The ODMH Office of Consumer Services, in collaboration with local constituents, developed a Recovery Process Model and Emerging Best Practices to define and enhance the quality of mental health services. These were developed as a guide for consumers to increase their understanding of their roles in the recovery process to advocate for the delivery of quality services by competent service providers. The Recovery Process Model clarifies what consumers have discovered during their personal recovery journeys about their roles and the roles of others in the recovery process. Additionally, the Recovery Process Model and Emerging Best Practices are intended to serve as educational tools for family members/ significant others, mental health professionals, administrators, regulators, and third-party payers.

The ultimate goals for individuals in the recovery process are to:

- function at their optimal levels;
- be able to utilize entities outside the mental health system (e.g., families, other resources); and
- provide support to those entities, as appropriate.

In addition, the process recognizes the rights of people with severe mental illness to:

- live in the community, and
- participate in a lifestyle of their choice.

The above rights are the underpinnings of recovery.

Guiding Principles for the Recovery Process Model

The following guiding principles formed the basis for the development of The Recovery Process Model and Emerging Best Practices:

1. The consumer is responsible for and does the work of recovery; therefore, consumer input is essential throughout the process.
2. The mental health system must be aware of its tendency to enable and encourage consumer dependency.
3. Consumers are able to recover more quickly when their:
   - hope is encouraged, enhanced, and/or maintained;
   - life roles with respect to work and meaningful activities are defined;
   - spirituality is considered;
   - culture is understood;
   - educational needs as well as those of their family/significant others are identified;
   - socialization needs are identified.
4. Individual differences are considered and valued across their life span.
5. Recovery from mental illness is most effective when a holistic approach is considered.
6. In order to reflect current "best practices," there is a need to merge all intervention models, including Medical, Psychological, Social, and Recovery.
7. Clinician's initial emphasis on "hope" and the ability to develop trusting relationships influences the consumer's recovery.
8. Clinicians operate from a strengths/assets model.
9. Clinicians and consumers collaboratively develop a recovery management plan. This plan focuses on the interventions that will facilitate recovery and the resources that will support the recovery process.
10. Family involvement may enhance the recovery process. The consumer defines his/her family unit.
11. Mental health services are most effective when delivery is within the context of the consumer's community.
12. Community involvement as defined by the consumer is important to the recovery process.

Emerging Best Practices

Using this dynamic Recovery Process Model, generic and universally applicable practices emerged that influence recovery. These Emerging Best Practices identify preferred behaviors based upon the best available knowledge and consensus of a diverse working group comprised of consumers, family members, and mental health professionals. As the impact of these behaviors is measured, it is anticipated that these practices will be refined and/or others will emerge.

In the existing Emerging Best Practices, behavioral statements have been identified for the consumer, clinicians, and community across the four levels of recovery and the nine essential components as defined in the Recovery Process Model.

This model indicates that during the recovery process, in order for consumers to function optimally they may be initially dependent upon clinicians, family members, and other community supports to provide supports that are consistent with the best practices identified. Additionally, consumers are encouraged to take personal responsibility for managing their recovery by following the best practices as defined. Failure of any of these entities to behave consistently with these best practices could result in consumers not functioning optimally, taking longer than necessary to reach their optimal level of functioning, or having unnecessary relapses. Also, the services provided would be less cost-efficient or cost-effective. Emerging Best Practices plays a significant role at multiple levels within the clinical process:

Consumer

Consumers can use these best practices to guide their actions during their recovery, identify the services and/or supports they need, and assist them in receiving appropriate services and/or support when they need it.

Clinician

Clinicians can use these best practices to validate that they are providing the appropriate services, at the right time, that will result in the best outcomes. Additionally, these best practices can assist clinicians in providing consistent services and supports to consumers in recovery.

Community

Community supports can use these best practices to determine the resource commitment that is needed to facilitate consumers' recovery in a timely manner.

As new clinical, scientific, and technological developments take place, this model and the best practice statements will be updated to reflect those changes.[1]

OUTCOMES & MENTAL HEALTH

You can't tell which way the train went by looking at the tracks.

Frederick L. Newman

As stated before, mental health organizations exist to provide services to people in need. Consequently, each service delivered becomes an important measure for looking at a mental health organization. That fact remains true whether one's perspective is clinical, administrative, fiscal or operational.

That basic service unit can be broken down into an 11-part question, as follows:[2]

1. Who
2. delivered how much of
3. what
4. to whom,
5. when,
6. where,
7. within what program,
8. reimbursable by what source of funds,
9. for what amount,
10. at what cost,
11. and with *what effect*?

[1]Additional information about the link between the Ohio Mental Health Consumer Outcomes Initiative and the Recovery Process Model and Emerging Best Practices can be found on the Outcomes System website at: *http://www.mh.state.oh.us/initiatives/outcomes/resrecovmodel.html*

[2]Obviously, there are more pieces of information required to run a mental health system, but if one can track the above 11 items for all key activities, and tie them back to additional details about the total resources available, the recipients of the services, the providers, and other important factors, one would be able to report most of what is required to operate and support a mental health system.

Traditional mental health management models have been structured around the first 10 items. Reports can tell you everything you might want to know about how many people were seen, services were delivered, or dollars were spent. But such quantitative measures are about the provider, and tell us little or nothing about the consumer. In Newman's language, they're "tracks."

Outcomes information, on the other hand, focuses on how the consumer fared, and not simply on what the provider did. As a result, understanding item 11 of the 11-part question demonstrates the value of the services provided from the consumer's perspective.

Consumer outcomes provide important information for the management of consumer care, the improvement of the service delivery system, and accountability for public resources.

Management of Consumer Care
Consumer outcomes data provide information for both clinical and administrative care management.

Quality Improvement
Aggregated consumer outcomes provide data for the ongoing quality improvement processes of agencies, boards and ODMH and for developing and monitoring best practices.

Public Accountability
The results obtained concerning consumer outcomes demonstrate the public mental health system's accountability for tax dollars to the general public and the State of Ohio and federal governments.

Outcomes data can be of use to consumers and their family members, workers/clinicians, agency/provider organizations, mental health boards, ODMH, and the general public.

That's why we're here, and it's why the Ohio Mental Health Consumer Outcomes Initiative was undertaken.

The Ohio Mental Health Consumer Outcomes Initiative

The Ohio Mental Health Consumer Outcomes Initiative is an ongoing endeavor to measure outcomes for consumers served by Ohio's public mental health system. The concepts of Recovery are reflected in the Outcomes System's values, the outcomes instruments, and the measurement process.

Measuring success in a large, complex mental health system requires balanced attention to data in three critical areas: quality, access, and cost. In order to resolve Ohio's lack of data on consumer outcomes as an aspect of quality, the Ohio Mental Health Outcomes Task Force (OTF) was convened in 1996 by the ODMH. The OTF was charged with developing an initial set of critical consumer outcomes and recommending a standard, statewide, ongoing approach to identifying and measuring consumer outcomes of Ohio's mental health system. This approach reflects the wide range of consumers, payers, providers, and human care systems, and will support planned change at the individual, agency, and all human care system levels.

The rationale for this effort included the need for better accountability; the need for benchmarks; the need to use data for improving services; national efforts in outcomes and performance measurement, clinical guidelines and improved business practices; the statewide encounter-based data system (i.e., MACSIS); the value of continuous quality improvement approaches; and the need to tailor outcomes measurement to Ohio's unique dynamics and characteristics.

OTF membership consisted of a culturally diverse group of consumers, families, providers, boards, researchers and evaluators and staff from both ODMH and the Ohio Department of Alcohol and Drug Abuse Services (ODADAS). The group met monthly for sixteen months and developed recommendations for a standardized approach to measuring outcomes for adults, children and adolescents.

Values-Based Decision-Making

Before beginning to work with the content of outcomes measurement, the OTF decided to invest time and energy in grounding its work in a common vision, mission and set of consensual values. These were referred to throughout the work of the OTF and were used as a screen to review the final recommendations. With only a few editorial changes to the original wording, the following were endorsed as an enduring foundation for the work of the OTF:

OTF Vision

All participants in Ohio's publicly supported human care system are accountable to monitor and continually improve the outcomes for consumers. Outcomes such as choice, respect, dignity, and cultural and clinical competence, embrace the values of Recovery for consumers and families. To inform this quality improvement, Ohio's systems use a variety of compatible data sources and reporting mechanisms, including a standard, statewide approach to measuring consumer outcomes.

OTF Mission

The Ohio Mental Health Outcomes Task Force will identify an initial set of critical consumer outcomes and will recommend to ODMH a standard, statewide, ongoing approach to identifying and measuring consumer outcomes and performance of Ohio's mental health system. This approach will reflect the wide range of consumers, payers, providers and human care systems and will support planned change at the individual, agency and all human care system levels.

OTF Values

The OTF shared the following values that underlie both the Vision and the Mission and were used to direct and evaluate the outcomes developed. All of the values apply equally to adults as well as children/adolescents and their families.

- The concept of Recovery drives services provision. Providers, consumers and their families share responsibility to: (1) create an environment of hope for Recovery; (2) determine the services and supports provided; and (3) participate actively in a flexible, evolving treatment process that reflects the evolving nature of these conditions.
- Mental health services are those which are. high-quality, clinically and culturally-competent, strengths-based, flexibly developed and delivered, built on natural supports, driven by consumer-identified needs and preferences and are linked with other human care services essential for recovery.
- Clear, accurate and timely information is used for the continuous improvement of outcomes for consumers and provides a basis for accountability to consumers, families, communities and payers.

- Outcomes measurement and performance monitoring are based on methodologically sound, cost-effective approaches that incorporate both positive and negative events and that apply to a range of consumer populations and perspectives, including those of children and their families.
- The OTF process respects others' values, perspectives, ideas and roles, and is based on development of a shared language of measurement.
- The statewide approach to outcomes measurement seeks a balance between improved accountability and continuous improvement, on one hand, and reasonable implementation on the other hand.
- It is a shared responsibility to promote an environment which ensures the communities' acceptance and integration of consumers.
- All Ohio residents should have access to services which help achieve self- determined goals respectful of culture, ethnicity, geographic location, family status, linguistics, gender, age, sexual orientation, creed or disability.

Assumptions

The following assumptions shaped the work and recommendations of the OTF:

Commonality

A common set of desired outcomes is required for measurement statewide. A critical component of the use of outcomes data for all stakeholders is the ability to benchmark at both local and state levels. Without a standard set of measurements to capture outcomes, comparability across settings would be impossible to achieve.

Integration with Other Data

Outcomes data should be used in combination with other data for continuous quality improvement. This means that outcomes findings are used as indicators requiring further exploration and subsequent treatment, program and system planning.

Availability

All stakeholders in Ohio's publicly-supported mental health system should be able to use the outcomes findings.

Consumer Perspective
Outcomes should be measured primarily from the perspective of consumers and in a manner that complements rather than replaces the clinical judgment of practitioners.

Values-Based
The OTF approach is an incremental yet innovative addition to Ohio's mental health data base and should be evaluated during implementation to ensure that it fulfills the OTF values (e.g., it is useful, cost-effective and respectful of all participants).

Outcomes Domains for Measurement[3]
The OTF based its approach on the goal of having each person surveyed by only one key provider, to be determined locally, at intervals specified according to the different population groups (adults with severe mental disabilities, other adults, youth with serious emotional disturbances, other youth). Outcomes to be measured were grouped under the following domains:
- Clinical Status (Symptom Distress)
- Quality of Life (Life Satisfaction, Fulfillment, and Empowerment)
- Functional Status
- Safety and Health

The Ohio Outcomes Model also includes multiple types of respondents who provide different perspectives:
- Consumer
- Family Member of Child/Adolescent Consumer
- Worker/Clinician

[3]Additional information about the link between the Ohio Mental Health Consumer Outcomes Initiative can be found on the Outcomes System web site at:
http://mh.state.oh.us/initiatives/outcomes/outcomes.html

THE OUTCOMES SYSTEM: A Tool for Shaping Consumer Care

A Recovery-oriented, outcomes-based clinical process can be pretty simple, actually. The following text and diagram illustrate the flow of activity.

1. The consumer makes contact with the mental health agency and is linked with a clinician.
2. As part of the evaluation process, consumer outcomes instruments are completed by the consumer, the agency worker and, in the case of children or adolescents, by the parents. The outcomes instruments serve as tools to focus the evaluation and aid in service plan development.
3. The information on the outcomes instruments is either captured in real-time or entered after the fact into a system.
4. Outcomes reports are produced and used by the consumer and the clinician to decide upon a mutually acceptable course of action.
5. Information about the consumer is reviewed by appropriate others (e.g., clinical supervisors) for both appropriateness and quality.
6. The information is made available in reports that can be used for agency-level continued quality improvement.
7. Certain information is sent to the local board.
8. The information is made available in reports that can be used for board-level continued quality improvement.
9. Certain information is sent to ODMH.
10. That information is made available in reports that can be used to refine and improve services at the state, the board, the agency and the individual consumer-clinician levels.

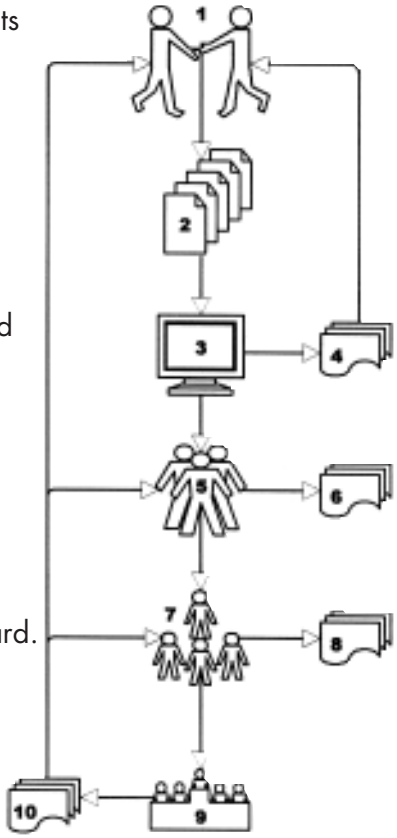

Like we said ... pretty simple. And very powerful when it works.

So much for the simple picture. What's really required to make it all work?

Earlier, the statement was made that the successful delivery of service involves a number of parties working together. In order for the above diagram to function "as advertised," the following expectations must be met:

Consumer

- Understands the items and the entire process of how the information will be used
- Completes the instrument with staff assistance as necessary
- Has been involved in training, conducted by peers, to assist understanding of the outcomes process and how to use outcomes information in the recovery management planning process

Support Staff

- Shows orientation video and ensures that consumer understands the instrument, the process and the technology
- Has received training in how to assist consumer/family members with completing the instrument, especially when literacy level, disability or other similar conditions are a factor
- Assists the consumer with the instrument as necessary

Support Staff (MIS)

- Ensures that technology can deliver "real time" report accurately and consistently

Clinician

- Has training and demonstrates competency in recovery principles and applications
- Receives "real time" report(s) and reviews report(s) prior to meeting with consumer and during meeting with consumer

- Continually ensures that consumer understands the outcomes instrument and process
- Has received training in how to assist consumer/family members with completing the instrument, especially when literacy level, disability or other similar conditions are a factor
- Assists the consumer with the instrument as necessary
- Incorporates strengths as well as problem areas in assisting with developing goals
- Can actually tie specific instrument items to specific goals, objectives, tasks on recovery management plan
- Uses reports that show change/no change with consumer, family members
- Uses reports that show discrepancies in perceptions among consumer, family, clinician in working with consumer, family
- Uses reports that show change/no change over time. Discusses with supervisor about how to gain greater improvement, next steps in recovery, termination upon completing goals, etc.

Administrators/Managers

- Ensure that data are provided in timely fashion to supervisors and that supervisors have ongoing training in interpretation and application to decision-making programmatically and with individual supervision
- Develop mechanisms for consumer/family member training
- Engage consumers/family members on decision-making committees and model how their input is valued and used
- Review aggregate data in light of overall "recovery thresholds" for each program and at agency-level. Make program/staffing modifications that are informed by outcomes results
- Adopt a Recovery Management Plan format and process that allows/facilitates/mandates the use of Outcomes
- Arrange for all staff to have sufficient time, tools and resources to do their work
- Implement quality improvement processes that use outcomes data for all departments

- Incorporates the outcomes-based quality improvement processes into programmatic decision-making
- Share aggregated data with the Board of Directors

Consumer Family Members

- Have been involved in training, done by family members, and understand their roles andhow outcomes information can be used to advocate for loved one(s) in the planning process and how aggregate data can be used for advocacy system-wide

Supervisor

- Uses individual instrument results to review plans for persons with significant positive or negative changes
- Uses aggregate data with each supervisee to discuss strengths, areas for improvement
- Uses aggregate data for groups of supervisees for management purposes, shifts in supervisory techniques, etc.

QI/Compliance Staff

- Ensure that outcomes instruments are completed for each consumer in timely fashion
- Ensure that recovery plans reflect use of outcomes information
- Ensure that consumer/family member training is on-going, and that consumers/family members are represented on decision-making committees and their input is valued and used
- Ensure that outcomes reports are used at each department level and that each department loops back to the other (e.g. MIS error reports to clinical supervisors; clinical supervisors to support staff to ensure high quality of instruction to consumers and families; aggregate reports/individual reports are available and used through all levels of clinical staff and with consumer/family members groups)

That's a lot of expectations, and in order to feel assured that they will be met, there's a lot of organizational work that needs to be done - the kind of coordinated work that doesn't happen by accident.

And just how does one do all that?

Read on; that's what the rest of Using an Outcomes-Based Model to Re-engineer Your Organization is all about.

CONSUMER-CENTERED MANAGEMENT

Value is the predecessor of structure.
Robert M. Pirsig

Most mental health organizations function within mission statements that define the consumer and service oriented nature of their work. Those missions, in turn, have significant implications for any re-engineering efforts designed to enhance consumer recovery or improve the use of information in decision-making. The rapidly changing mental health environment further exacerbates the challenges faced by mental health organizations. To help ensure survival in an uncertain future, the mental health organization's primary task is to develop effective consumer-centered decision-making techniques and to use those techniques to facilitate consumer recovery.

The Mental Health Mission in Ohio
ODMH has adopted the following to guide its work:[4]

Vision
Ohio will be a community of mentally healthy people who lead fulfilling and productive lives.

It will be a caring community with strong compassion for and a determination to respond effectively and respectfully to the needs of all citizens with mental illness and behavioral disorders.

Mission
The mission of the Ohio department of Mental Health is to establish mental health and recovery to mental illness as a cornerstone to health in Ohio, assuring access to quality mental health services for Ohioans at all levels of needs and life stages.

Values
Ohio's mental health system is committed to these values:

- **Respect** - We treat all people with respect and dignity. We support individual choice and build on the strengths of individuals, families and communities.

[4]While the ODMH mission statements may differ in details from the specific mission statements of other Ohio Mental Health organizations, it is fair to say that the ODMH statements are representative of the others.

- **Integrity** - We are honest and ethical in all our dealings. We keep our promises and are accountable for our actions.
- **Dedication** - We are committed to helping every Ohioan with mental health needs. Our goal is to exceed the expectations of those we serve.
- **Quality** - We strive to provide the highest quality services to the people of Ohio. We embrace and respect individual and community differences and provide clinically competent services and interventions in a manner that is acceptable to consumers and families and that help them to achieve the outcomes they desire.
- **Teamwork** - We promote partnerships that reach across system and organizational boundaries.

The above mission reinforces the statement made earlier that organizations like ODMH, mental health boards and individual service providers exist to provide services to people in need and to facilitate consumer recovery. The mission is an important one, and a variety of funding sources ranging from the citizens of the state to private insurance carriers and corporations are willing to pay for those services. Because both people's lives and money are involved, tracking the services provided by a mental health organization is a critical task.

The Mental Health Marketplace

The mental health world is changing, and not always for the better. Today new management and financial challenges confront mental health organizations, not the least of which is reduced funding. The mental health program manager must give continuing attention to program costs, service income and financial self-sufficiency. The challenges are compounded in many instances by the problematic structure of many Federal programs that support care.

The catch phrase these days for mental health programs is to "run them like businesses." This does not mean that profits are more important than people are. However, it does mean that mental health organizations cannot be casual about their approach to management. Mental health managers are beginning to use information to assist them in decision making, and to help them gain better control of how their organizations are running.

Managers cannot manage if they are uncertain of the mental health organization's "product," how well the product is delivered, how effective the product is, how

much the product sells for, or how well the organization does in collecting revenues for that product. Like every other care provider, mental health organizations need effective tools to help in assisting consumers, managing programs, and gathering revenue.

Toward that end, systems are being used to manage time and event files for everyone from managers to clerks; they are tallying encounters and describing the services delivered, the outcomes achieved and the costs incurred by those encounters. These data are grist for the mill of decision making.

But are the systems the right ones, given the mission at hand?

Implications for Process Re-engineering

Any decision-making process should be designed to support the mission of its parent organization. To support effectively, the process should possess several important characteristics:

Strategically-Focused

Mission statements are, by their very nature, strategic statements fundamental to long-term decision making and operations. Any supporting information structure should provide information that supports decision-making at the strategic level, and not simply limit itself to operational data.

Organization-Wide Implementation

To address the requirements inherent in its mission statements, the process should encompass all components of its organization, including clinical, administrative, fiscal and operational.

Consumer-Centered

The consumer is the reason mental health organizations exist, and any re-engineered process should place the consumer (and not the organization) at its focus.

Recovery-Focused

In addition to focusing on the consumer, the re-engineered process should specifically support the Recovery Process Model and Emerging Best Practices. In each of the above items the organization, per se, is secondary; it's the

organization's consumers that are primary focus. Therefore, it is appropriate that plans for continued development and evolution of any re-engineering project should also proceed along consumer-centered lines.

The Re-engineering Project

Despite the potential benefits to be gained from process re-engineering, how to undertake a successful re-engineering project may still be an unanswered question for many mental health organizations. There are also other concerns; re-engineering projects can cause organizational distress by exposing conflicts in the organization (e.g., staff territoriality, overlapping responsibilities, management problems, personality clashes).

Therefore, re-engineering should be approached positively. By itself, the information contains no imperatives, effects no control, makes no decisions - it only reflects what is going on in the service delivery system. A re-engineering project can (and should) act as a barometer for what is happening within the organization. Because the clinical process touches each part of the organization, a re-engineering of the clinical process will also.

Such an in-depth review of the clinical process is appropriate because the role of information within mental health organizations is changing as we enter the 21st century. In the entitlement world of the past twenty years, one simply did what was "right" for the consumer, billed for whatever one did, and used an information system solely to record and report services. Under today's more highly structured care management models, the individual consumer's needs and benefits are much more a part of the service delivery process (e.g., consumer recovery, specialized service contracting, restrictive credentialling requirements, benefits enrollment and verification, prior authorizations, clinical necessity). As a result, the proactive use of consumer-centered information has become the method whereby one does business.

In many ways, the use of information for decision making has moved from being a passive process at the end of the service delivery chain to being an active component at the front.

That's why you re-engineer.

COMPONENTS OF CLINICAL RE-ENGINEERING

The cosmos is all that is, or ever was, or ever will be.
Carl Sagan

While clinical re-engineering might not be as sweeping as Carl Sagan's definition of the cosmos, at times it feels pretty close. Often the first question asked about clinical re-engineering is, "who and what is involved?" In consumer-centered mental health organizations it's probably easier to ask, "who and what isn't?"

Consumer-centered clinical re-engineering has the potential of touching virtually everyone involved with a mental health organization. Why? Because the primary business of mental health organizations is the delivery of service and almost everybody involved with the organization is involved with service delivery. This chapter presents a lot of information about both the components of clinical re-engineering and consistent themes that occur through the process; but be careful not to lose sight of the forest for the trees. As you review the information in this chapter, try not to focus on the details; instead, continually reprocess the information in the context of:

- consumer-centered focus;
- active involvement of staff;
- staff and consumer self-management through feedback;
- movement toward outcome management; and
- movement away from process management;

If you do so, you will gain a better understanding of how the varied components of clinical re-engineering can relate to your organization.

COMPONENTS OF CLINICAL RE-ENGINEERING continued...

The Realm of Clinical Re-Engineering

In Chapter 2 we talked about the many constituents involved in making the Outcomes System work effectively. The diagram below provides a similar, but abbreviated view of an outcomes-based clinical process and identifies some of the parties that are involved in each step.

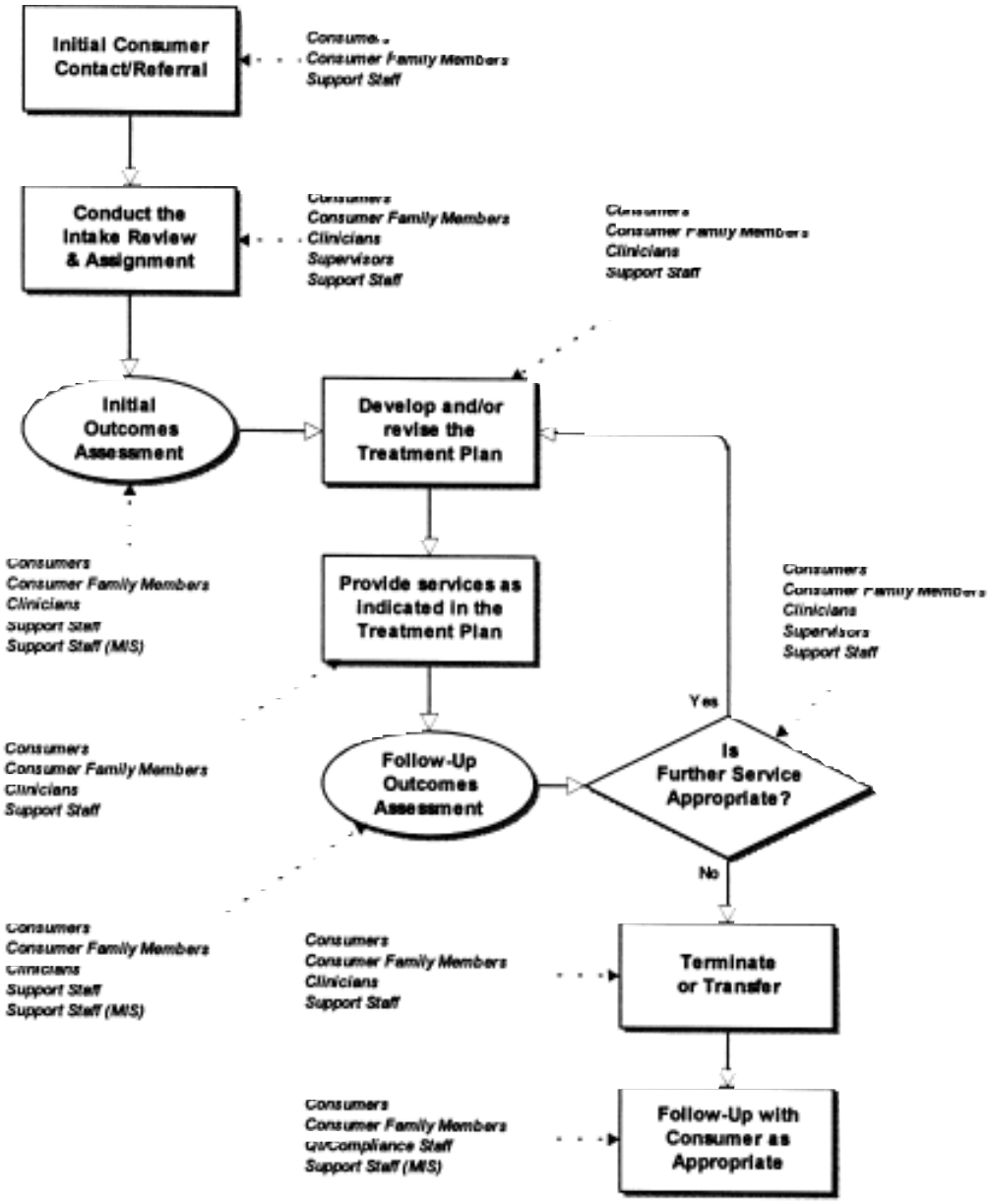

The diagram is actually much more comprehensive than it appears at first glance. For example, "Support Staff" (who are present in each process in the diagram) include a wide range of people and roles, including:

- people who answer telephones, direct calls, schedule appointments, and greet people in the reception area;
- financial services staff who monitor benefits, send out bills, maintain accounts, and assist with consumer questions related to the complexities of billing and accounts receivable;
- clinical records people who work to ensure that clinical records are complete, organized, and available;
- human resources personnel who process consumer applications for internal job openings and help with the myriad of payroll and benefit issues that arise;
- kitchen staff who prepare and serve meals;
- maintenance staff who clear the snow from the sidewalks in the winter; and
- almost everyone else who is related to the mental health organization and has direct or indirect contact with consumers and their families.

If you think carefully about each step in the clinical process, you will begin to get an idea of the degree to which a consumer-centered clinical process permeates the entire organization. It accomplishes little to have a few isolated pockets of consumer-centrism if the rest of the organization pays little heed to anything beyond its own immediate needs and wants. Therefore, when you consider the clinical process in a re-engineering effort, think in a fashion than encompasses the entire organization.

Re-engineering Scope

No man is an island, entire of itself;
every man is a piece of the continent, a part of the main.
John Donne

In a consumer-centered system, everyone works in the context of appropriate consumer-centered policies and procedures, has the tools and technologies required for the job, and has been trained in the effective use of resources. But it doesn't end there; applying policies, procedures, tools and training that are applied in isolated programs isn't enough.

COMPONENTS OF CLINICAL RE-ENGINEERING continued...

In an orchestra, not only does each participant need sheet music appropriate to his or her instrument, but everyone's sheet music must be for the same song. In other words, the entire process must be "orchestrated" to work together across the group.

It's no different in mental health; consumer-centered processes need to be organization-wide, procedures need to be consistent, common tools and technologies need to be available, and the rules need to be known by all.

All of the following must not only be present, but must be consistent throughout the organization if clinical re-engineering is to be effective:

Mission - The definition of the job

Policies - Accepted ways of approaching the job

Procedures - What staff are told about how to do the job

Operations - How the organization is set up to support the job

Components of a Consumer-Centered System[5]

There are six major system components that need to be in place for ongoing management of a consumer-centered system. Each of them needs to be incorporated in any clinical re-engineering project.

1. **Program Design** - Program design is the process of relating services to program goals for consumers. Key aspects of program design include:
   - identification of consumer-centered program goals and services; relating program goals to service design and coordination;
   - assurance of dependable and useful measures of consumer behaviors and service goals (i.e., consumer outcomes);
   - relating internal program management measures to external reporting and monitoring; and
   - training of staff and consumers to be able to both maximize the utility of program design decisions, and to contribute to their continued evolution.

[5]Adapted from Frederick L. Newman and James E. Sorensen in *Integrated Clinical and Fiscal Management in Mental Health* (1985).

2. **Clinical Process Design** - Clinical process design describes the concerns and decisions of consumers and staff during consumer entry, service planning and delivery, and termination from a service program. Key components of clinical process design include:
   - identification of key information needs related to the admission or entry process (Who is the consumer? What are the initial outcomes? Is the consumer in the right place?);
   - identification of key information needs related to service planning (What are the issues? What events are to happen?);
   - identification of key information needs related to the review process (Are services occurring as planned? What are the interim outcomes? What changes are needed?);
   - identification of key information needs related to the termination and follow-up processes (Were goals met? What are the final outcomes? Is follow-up required?); and
   - training of staff and consumers in the use of the above information to help achieve the goals of consumer recovery.
3. **Visible Evidence** - Visible evidence includes clinical records and other processes that foster and support dependable clinical communication. Key components of visible evidence include:
   - development of clinical record systems that are proactive facilitators consumer care, instead of being reactive administrative paper repositories;
   - identification of factors that influence clinical data validity, reliability and dependability;
   - continued refinement of consumer outcomes information and reports for use in initial assessment and recovery planning, progress monitoring over time, and subsequent treatment decisions;
   - use of consumer outcomes and clinical records information as a supervisory aid, and to look at patterns of service use and service benefits among different groups of consumers; and
   - training of staff and consumers in the use of the above information to help improve the quality and effectiveness of treatment.

COMPONENTS OF CLINICAL RE-ENGINEERING continued...

4. **Fiscal System** - Formulates cost-finding procedures to relate costs and clinical efforts. Key components of the financial system include:
   - development of techniques for estimating costs of service for each consumer in ongoing management;
   - setting of rates and fees to be charged and billed;
   - creation of models for planning resource allocation (budgeting) to match the goals of programs and services;
   - definition of processes that can interrelate the cost and effectiveness of service; and
   - training of staff and consumers in the use of financial information to help them manage their respective roles in the clinical process.
5. **Management Support** - Describes the supporting roles of staff in relationship to the clinical/service process. Key components of management support include:
   - identification for all staff of the questions and issues they address in support of those who perform the clinical process; and
   - training of staff and consumers in their roles with respect to the clinical process.
6. **Information Systems** - Provides the linkages among consumers, staff, and managers in providing and managing service delivery. Key components of management support include:
   - identification and linkage of data sources for measuring key performance indicators as required for assessing the achievement of organizational goals;
   - preparation of timely individualized reports for use by consumers, families, clinicians, and supervisors in decision-making related to the clinical process;
   - preparation of timely aggregate reports for use by supervisors, QI/compliance staff, and administrators/managers in programmatic decision-making related to the clinical process; and
   - training of staff and consumers in how to interpret and use outcomes and other data as the foundation for decision-making.

Mental health organizations generally deal with most or all of the above major system components in some form. As pointed out above, however, dealing with the components individually isn't enough. The value added by a comprehensive clinical re-engineering project is the integration of all six components into a single, consumer-centered approach that enhances the opportunity for consumer recovery.

Recurring Re-engineering Themes

There are three recurring themes embedded in the above re-engineering components - (1) the use of performance/quality measures; (2) feedback mechanisms; and (3) consumer and family involvement.

Performance/Quality Measures

Performance/quality measures are at the heart of a consumer-centered organization. If you set goals, you need to be able to evaluate progress toward those goals. If you consider clinical re-engineering and establishment of a consumer-centered organization, you need performance/quality measures to measure all of the following areas mentioned earlier:

Mission - The definition of the job
Policies - Accepted ways of approaching the job
Procedures - What staff are told about how to do the job
Operations - How the organization is set up to support the job

The range of performance/quality measures required to monitor and manage a consumer-centered organization fall into at least five domains.[6]

1. **Outcome Measures** - Representative system measures include:
   - Ohio Mental Health Consumer Outcomes Initiative
   - Consumer Satisfaction to Access to Care, Service, and Follow-Up
2. **External Environment** - Issues that relate to the quality of the operation of the organization with respect to externally imposed requirements. Representative system measures include:

[6]Adapted from David Lloyd of MTM Services in a presentation entitled *Integrated Performance Measurement Systems* mad January 24, 2001, at the first HIP AA Roadmap Conference (Boston, Massachusetts).

COMPONENTS OF CLINICAL RE-ENGINEERING continued...

- National, State, County and Local Requirements
- Local Mental Health and Substance Abuse Board Requirements
- HIPAA Compliance
- Public Image
- Payor Requirements
- Legislative Requirements
- Strategic Business Planning
- External/National Accreditation Requirements (e.g., JCAHO)

3. **Provider Measures** - Issues that relate to the efficiency of individual clinical staff. Representative system measures include:
   - Billable Service Hours & Productivity
   - Utilization Management Standards Compliance
   - New Referral Standards
   - Documentation Submission
   - No Show/Cancellation Rates
   - Peer Review
   - Progress Toward Goals
   - Best Practice Standards Compliance
   - Cost Effectiveness Indicators

4. **Financial/Auditing Measures** - Issues that relate to the efficiency of business operations. Representative system measures include:
   - Ethics/Corporate Compliance Plan
   - Collected vs. Budgeted Amounts
   - Late Service Tracking Documents
   - Claims Denials
   - Unauthorized Services
   - Paybacks
   - Cash Flow Performance Over Time

5. **System Measures** - Issues that relate to the quality of the operation of the service delivery system, per se. Representative system measures include:
   - Care Environment
   - Professional and Consumer Ethics
   - Consumer Care
   - Consumer Rights
   - Information management
   - Cultural Competency

- Human Resources
- Access to Care
- Employee Satisfaction
- Administrative/Support Performance Indicators

Feedback Mechanisms

The second recurring theme is the need for feedback mechanisms. Once the methods of measuring movement are in place, feedback mechanisms are essential to improve quality in a consumer-centered organization. Without feedback, any organization and the people who comprise it can drift away from the mission at hand.

The two most critical types of feedback in a consumer-centered organization are supervision and training.

The impact of clinical supervision on client outcomes is considered by many to be the acid test of the efficacy of supervision.

Ellis & Ladany (1977)

- **Supervision** - Supervision is the process of overseeing, directing and managing the clinical process. Supervision serves three key roles, internal and external to the organization; it can be: (1) provider-focused and used to enhance the professional functioning of the person delivering service; (2) consumer-focused and used to monitor the quality of service being delivered; and (3) profession-focused and used as a competency tool for assessing appropriate professional skills and abilities for the service delivery profession.

Outcomes-Based Supervision - The mental health profession has traditionally looked at outcomes from the verbal reports of clinicians, rather than through the use of standard measures. By providing a comprehensive set of standard outcomes measures, the Ohio Mental Health Consumer Outcomes Initiative provides an opportunity to enhance the supervision process. Availability of ongoing outcomes information from consumers, family members and providers makes outcomes-based supervision a real option.

COMPONENTS OF CLINICAL RE-ENGINEERING continued...

Points in the clinical process[7] where outcomes-based supervision can occur include the following:

- Intake Review & Assignment - Outcomes-based supervision can be used to help providers identify consumer goals, match clinicians with consumers based on experience or presenting problem areas, and determine appropriate types and intensities of service.
- Treatment Planning - Outcomes-based supervision can be used to help providers refine the focus of treatment through review of self-assessments and goals determined by the consumer and family members. Supervision can also be a tool in the identification of consumer strengths and in the setting of expected outcomes and time periods for treatment.
- Periodic Review & Outcome Assessments - Outcomes-based supervision can be used to help providers identify consumer treatment plateaus, shifts of consumer focus caused by internal and external factors, and indicators of consumer deterioration or success in treatment.
- Termination & Transfer - Outcomes-based supervision can be used to help providers evaluate when consumers are ready to end services and plan for potential future needs and follow-up.

Education that fails to enhance behavior is for naught.

Albert Einstein (Attributed)

- Training - People cannot be expected to behave in particular ways if they've never been provided with the tools and techniques required to support the desired behaviors. Therefore, the role of training in a consumer-centered organization is to help people understand the underlying concepts of consumer recovery and outcomes-based decision-making, and to provide them with the tools and techniques they need to put those concepts into action.

[7]Refer to the diagram presented earlier in this chapter.

To be most effective, a well-structured organizational training program uses a six "C" approach:

1. **Consumer-Centered** - The training program is consumer-centered; it focuses on the roles of staff and consumers in relationship to achieving consumers' goals.
2. **Coaching** - The training program uses a coaching method; it informs rather than directs. Training is more effective when it helps people "follow the path" instead of "following the guide."
3. **Comprehensive** - The training program is comprehensive; it encompasses all aspects of the clinical process, including those that aren't part of the direct consumer-clinician interaction.
4. **Consistent** - The training program is consistent; all components convey the same message. The use of information in decision-making, consumer recovery, and emerging best practices are key training themes.
5. **Complete** - The training program is complete; each training module covers all the information required to understand the topic. The program design doesn't assume that people already understand the topic, or that they will remember everything covered in the sessions. Training is supported with manuals, videos, written procedures and other aids.
6. **Continual** - Finally, the training program is continual. Recollections change, staff come and go, and details tend to fade over time. The training is avail able on a timely basis for both new people and for former attendees who simply need a "refresher" session.

Consumer and Family Involvement

The third recurring theme is the high level of consumer and family involvement in the clinical process. Consumers and their families are the reason mental health organizations exist, and their integration into all levels of the consumer-centered organization is an important part of the pursuit of consumer recovery.

COMPONENTS OF CLINICAL RE-ENGINEERING continued...

Earlier, the following were identified as two of the guiding principles for the Recovery Process Model:

- The consumer directs the recovery process; therefore, consumer input is essential throughout the process.
- Family involvement may enhance the recovery process. The consumer defines his/her family unit.

Increased consumer input and family roles are the Recovery Process Model's greatest challenge to "traditional" treatment models. While consumers and families have had roles to play in the past, the Recovery Process Model assumes a much more intensive participation than has generally been the case.

Levels of Consumer Participation in the Clinical Process - One way to view the degree of change that occurs in consumer and family involvement under the Recovery Process Model is through a six "I" model. The closer your clinical process comes to meeting the criteria of the sixth level, the more successful your organization is likely to be in promoting consumer recovery.

1. **Information** - Consumers and family members are informed of major treatment decisions made by others.
2. **Input** - Consumers and family members have limited input into major decisions regarding treatment.
3. **Influence** - Consumers and family members have enough influence over providers to help shape major treatment decisions.
4. **Involvement** - Consumers and family members are involved with some major treatment decisions.
5. **Inclusion** - Consumers and family members are included in the decision-making process for most significant treatment decisions.
6. **Integration** - Consumers and family members are fully integrated as partners in all aspects of the clinical process, from admission through termination.

Points in the clinical process[8] where consumer and family integration occur include the following:

- **Intake Review & Assignment** - During the early contacts with the mental health organization, consumers and family members complete initial outcomes assessments and other materials that are used to help identify presenting problem areas, consumer strengths and initial baseline status.
- **Treatment Planning** - Following a review of the initial outcomes assessment and other materials, the caseworker and the consumer (and family members, as appropriate) collaborate to develop the recovery plan, including goals for treatment, intended services and treatment timeframes.
- **Periodic Review & Outcome Assessments** - Progress reviews and outcomes assessments occur throughout the clinical process and consumers and family members are key players in the process. Following a review of updated outcomes and progress to date, the caseworker and the consumer (and family members, as appropriate) decide whether continued service is appropriate. If so, they collaborate on revisions of the recovery plan, service goals, and treatment timeframes.
- **Termination & Transfer** - When the caseworker and the consumer (and family members, as appropriate) decide that continued service is no longer appropriate, they jointly determine the point and conditions of termination, subsequent referral, and any follow-up plan.

[8]Refer to the diagram presented earlier in this chapter.

CASE STUDIES IN CLINICAL RE-ENGINEERING

The following pages describe re-engineering efforts of several organizations. They range from major re-engineering of clinical processes, to development of recovery assessment tools, to simple process improvement. In other words, the examples given are as diverse as the organizations they represent.

But they all have two things in common - all represent organizational change related to consumer needs, and all were instituted in response to a recognition that consumer-centered organizations are not only the right business; they are good business.

The case studies that follow are not intended to show what you should do in your organization; they are intended to show what others have done. But, by looking over the work of others, you may refine your own ideas of what you think will work in your organization.

Outcomes-Driven Clinical Reorganization
Nova Behavioral Health

Nova Behavioral Health Center is a Stark County-based (Ohio) mental health agency that, like other organizations, faced numerous clinical and administrative challenges in the rapidly changing mental health environment.

Nova served as a pilot site for the Ohio Mental Health Consumer Outcomes Initiative. For the project to be successful, it was important that all stakeholders in the recovery model - consumers, families, caregivers, and providers - "buy in" to the value of the project. The outcomes process needed to be more than just another administrative requirement or "just one more piece of state-mandated paper;" it had to become part of the clinical culture of the organization. New procedures would have to bring clear value to the clinical process without increasing the burden of paperwork for the consumer or the provider.

The Process - Nova's re-engineering project was to design and implement improved care management processes within the framework of a consumer outcomes and recovery philosophy. Such a change would best be accomplished through a significant shift from operating as a reactive provider-centered organization to a more proactive, consumer-centered one.

The following table shows characteristics of the Nova system both before and after re-engineering.

Before "Reactive"		**After "Proactive"**
Compliance	→	Re-engineering
Quality Assessment	→	Quality Improvement
Punitive Environment	→	Learning Environment
Provider Driven	→	Consumer Driven
Client Termination	→	Consumer Outcomes/Results
Hierarchical Leadership	→	Diversified Leadership
Generate Reports	→	Change Processes
Consumer Dependent/Unaware	→	Consumer Independent/Aware

Nova identified the following steps in their re-engineering project:

- **Teams** - Set up the team(s) for the re-engineering;
- **Service Providers** - Involve service providers in the service re-design;
- **Process Review** - Analyze the current process to identify strengths and weaknesses;
- **Model** - Create a model for the re-designed services;
- **Measures** - Establish performance measures;
- **Test** - Test the new process;
- **Change** - Make any necessary corrections and re-test; and
- **Implement** - Then do what works.

Nova empowered its team to review the processes that the consumer and staff were currently doing. The team then took the information and decided how they would improve those processes. They then developed each new process and tried the change. After the trial, they evaluated the changes and made corrections where needed. The team then developed a plan on how the entire staff would be trained about the changes and what resources would be needed to make the change. They then presented the plan to Nova's leadership for administrative support and/or funding. Finally, the team asked the quality improvement staff to assist in developing the best method(s) to monitor the change to see that it was working.

CASE STUDIES IN CLINICAL RE-ENGINEERING continued...

The Solution - Nova identified three important values for incorporation in its re-engineering project - reduction of paperwork, elimination of duplicate questions asked of the consumer during the intake/admission process, and the cost and the potential need for more personnel to implement the Outcomes System. To address these issues, the outcomes instruments were loaded onto hand-held computerized units that allowed consumers and staff members to complete the instruments without the use of paper and pencils. A "real-time" report was generated from the units within seconds of the completion of an outcomes instrument. The report allowed the consumer and the provider to use the information during the initial visit to formulate individualized service plan for that consumer. Consumer needs and strengths were identified through use of the outcomes instruments. Self-identified needs and strengths were incorporated into the development of consumer-specific individualized service plans. The "real-time" report quantified the consumer's answers and provided scoring that allowed the consumer and provider to identify changes and improvement over time, following subsequent administrations of the outcomes instruments. Changes could then be made in the consumer's individualized service plan to address the changes in the pattern of outcomes.

To support the incorporation of the outcomes instruments in the clinical culture, a process of re-education and re-design of clinical processes ensued. This re-engineering process touched upon all aspects of the clinical and organizational processes and became embedded within the clinical culture of the organization. Clinical processes included the quality improvement plan for each clinical department. Corporate goals and objectives, and individual clinician performance criteria were also retooled to support the use of information provided from the outcomes process and instruments.

Throughout the process, Nova took the approach that the re-engineering project should have meaning for the organization and not be thought of as simply an unfunded mandate. They began by initiating the strategy with the goal of improving and documenting clinical outcomes for consumers to assist in their recovery. What they attained was a product that not only achieved their initial goals, but also improved overall documentation and reduced paperwork for providers.

Integrating Initiatives Into Clinical Flow
Ben-El Child Development Center

Ben-El Child Development Center is a children's mental health agency in Logan and Champaign counties (Ohio). They became involved in the Ohio Mental Health Consumer Outcomes Initiative fairly early, largely through their contact with Behavior Health Generations (BHG), a regional collaborative group of providers and boards seeking to improve service delivery in western Ohio. An eye opening aspect of being involved with the UM/QI committee of BHG was the vast array of state, regional and local initiatives affecting service delivery (e.g., Outcomes, MACSIS, Levels of Care). Very early in the process it became clear that most of the initiatives were good ideas in their own right, but taken holistically, they were overwhelming, and at times contradictory. The concept of "layering on" one good idea after another soon became a principle to avoid, in favor of an integrated model.

Ben-El's experience in clinical re-engineering is likely best understood within the limited scope of integrating two initiatives, the Ohio Scales Outcomes Project and the MetNet Level of Care protocols. It was an interest of their local system to utilize the benefits of both these initiatives in serving child and adolescent consumers, as well as to be proactive with the direction ODMH was taking in building an outcomes system. They began both projects within six months of each other.

As previously mentioned, both of these projects were presented and trained as separate ideas. Both had their own manuals, forms and training materials. Questions Ben-El had about integrating these ideas and avoiding duplication were left unanswered. No one they knew had utilized both projects, nor was anyone asking similar integration questions. One of Ben-El's biggest concerns was how they would present this to their staff in a way that made sense clinically and was practical. They needed a sound answer to the anticipated question of why staff should be expected to do additional paperwork along with their other duties. They began by making a commitment to staff that with any new initiatives, their administration would first find ways to integrate the new idea into their current system rather than just adding it to the top.

CASE STUDIES IN CLINICAL RE-ENGINEERING continued...

From Ben-El's perspective, the issue seemed to be two-sided: one was clinical relevance and the second was the burden associated with documentation. Ben-El addressed the clinical relevance question through training on the managed care principles of clinical appropriateness and accountability. They shared the belief that objective indicators were needed to determine consumer level of care and to track outcomes of treatment.

They adopted a multi-step method of addressing the more challenging issue of increased documentation and paperwork:

1. **Data Requirements Analysis** - Ben-El created a comparison checklist of required items in their clinical forms. They made a list of all the required information they must document for their various funding, credentialing or accreditation organizations. Next, they made a column for each of their clinical forms to see what information they were collecting. After checking off the required items they saw where information was being duplicated and where things were omitted. This was a helpful process and resulted in eliminating or consolidating several forms to streamline the documentation process. Both the MetNet Level of Care and Ohio Scales documents were included in the comparison checklist.

2. **Forms Design** - Ben-El redesigned their key clinical forms to integrate the essential features of levels of care and outcomes. They knew that new initiatives are more easily adapted if staff are prompted to use them routinely and if staff have those ideas highly visible in their daily work. The main thing they did was revamp their ISP by discarding some of the less useful items and replacing them with level of care criteria and an outcomes graph to track change over time. Both items are now reviewed with the consumer as part of the ISP cycle and do not require many separate forms.

3. **Quality Improvement Redesign** - Ben-El then incorporated the initiatives in their Quality Improvement program by redesigning their QA/QI processes to incorporate the new information requirements. This added further legitimacy to what they were trying to do, both administratively and with staff.

4. **Cost Analysis** - The final step was a cost analysis of the new initiatives. ODMH offered a helpful cost projection template to estimate the cost of administering the Ohio Scales project. The projections that resulted were rarely challenged due to the soundness of the template.

The result? Staff continue to need routine training and supervision to stay on track with these initiatives. However, by taking the time to prepare and consider the integration issues, staff were much more receptive to implementing the new ideas.

Implementing a Cluster-Based Planning System
Zepf Center
Zepf Center (Toledo, Ohio) began its project in 1995 after the Clinical Director and several other staff attended several conference presentations about a Cluster-Based Planning System made by Decision Support Synthesis, Inc. (DSS). They saw the potential of a cluster-based planning approach for service and human resource planning in the emerging managed care environment, as well as for outcome evaluation.

Zepf Center began working with DSS to identify subgroups (clusters) of their adult SMD consumer population and to develop targeted outcomes for each cluster. In 1996, the agency agreed to become a research site for DSS' Goodness of Fit study whose major objective was to identify Preferred Service Models for different clusters and to pilot-test specific service elements of these models. As these models were built as part of the research, Zepf Center's original vision progressed from managing "managed care" to a desire to understand best practices for specific clusters that were working toward more targeted recovery outcomes.

As the research proceeded and the agency prepared to test one of the Preferred Models, new clinical leadership continued to advance the vision. They began to focus on creating an agency whose organization of services was driven by the different strengths, problems, treatment, histories, social contexts, life situations and present functioning of consumers. It was at that point, in the fall of 1998 that they chose to totally re-organize the agency's services by the clusters they had identified. Most recently their vision has evolved to one where the Zepf Center has the necessary information, staff skills, and internal management capacity to adapt to the changing needs of the clients they serve.

A Commitment of Staff, Dollars and Other Resources
Since 1995, the Zepf Center has made a substantial commitment to the development of clusters and outcomes. To accomplish these tasks agency case managers were trained to assess clients using a functional assessment instrument

developed by members of the research team. A work group comprised of providers, family members, and provider/consumers then met monthly for about 18 months to confirm and enhance prose cluster descriptions and to specify targeted outcomes for each cluster. All Case Management staff were then trained in the cluster assignment process and the outcome rating procedures.

The first major activity in the Goodness of Fit study was the creation of Preferred Service models for each of the clusters. These model services, opportunities, or programs were intended to help consumers in each cluster achieve the outcomes previously developed by the agency work group. To accomplish this task a Local Service Planning Group (LSPG) was established which included agency case managers, supervisors, vocational specialists, psychiatrists, providers from other agencies, family members, and consumers. The LSPG met for a full day each month for a full year. Various group process techniques were employed to develop the Preferred Service Models, and due to the complexity of the task, regular attendance was very important. Zepf's commitment of staff time and effort was considerable and ongoing support from agency leadership never wavered, helping to insure continuous participation by staff.

Following the model development phase of the research, agency staff then formed an Implementation Team whose purpose was to plan a pilot test of specific elements of a preferred model for one of the clusters. The Implementation Team met for 3-4 hours each month. Rather than creating a small Implementation Team, the Zepf Center incorporated this into their overall management team meeting. Thus all staff that had been part of the LSPG process, all team managers, and other key clinical administrators participated in planning the pilot-test. Again, the commitment of the agency to the research was clear, consistent from top management, and was made to be total agency responsibility, not just for a few. Many hours of professional time were spent in the Implementation Team meetings and in work that needed to be accomplished between meetings.

The agency commitment to data collection was also substantial over the years. One of the unique situations at the Zepf Center was the close working relationship between clinical leadership and the MIS Department. The MIS manager was involved in model building and planning for the research pilot-test as well as in monitoring the collection of outcome data. Consumer outcome data have been collected annually or semi-annually since 1996. The MIS manager has worked

closely with the research team to provide service, hospitalization, and cost data. When needed, she also helped the research team add elements to the agency "service ticket" in order to track the provision of the pilot-test model service elements.

To implement the pilot-test, the agency committed the time and effort of an entire agency service team. This team was involved in additional training and was required to collect additional outcome and service data about the consumers they serve. However, the agency's commitment went beyond the CSP Pilot Team. In one case, for example, the Psychiatry Department chose to forego earning productivity units in order to provide medication and other education as part of pilot-test groups.

An Attitude That Supports Implementation of New Projects

Since 1995, members of the research team have been struck by the agency's overall positive attitude toward the planning and implementation of the Goodness of Fit pilot study. First, there were clear images from the top that once a decision was made to undertake a pilot-test, it was going to be an agency responsibility (not just for a few individuals to accomplish). As described above, the Implementation Team was headed by the new Vice President for Clinical Services and the Director of Community Support Services. All Team Leaders and other key staff were also members of the Implementation Team. This insured continuity from development of the Preferred Service Models to their implementation.

Planning for the pilot-test took approximately one year and as the work progressed, specific individuals (called Element Managers) assumed responsibility for more fully developing specific service components. Other Members of the Implementation Team, however, were always willing to help and often offered their time, resources and technical assistance. This was critical because some of the Element Managers did not have extensive experience as project directors or managers. Cooperation and support from specific agency components such as MIS and Psychiatry was also always available.

Over the last three years, planning meetings and other staff interactions appeared to focus almost entirely on solving problems rather than pointing out barriers. As time has gone by, agency staff appear to be even more confident in their ability to plan and implement additional service components.

Motivation to Integrate Research Findings or Practices Into Ongoing Operations

The clearest example of how the Zepf Center incorporated research results and practices was the decision in the fall of 1998 to reorganize its CSP services by cluster. This decision came about as the Implementation Team was planning for the pilot-test. The agency had decided to create a separate team, and it seemed feasible to consider reorganizing all the teams. In their decision process they utilized all the service, cost, and outcome data by cluster that they had been collecting for several years. Their new organization structure now consists of teams that specialize in serving members of one, two or three clusters. The clinical and programmatic similarity and/or compatibility of the clusters determined the specific clusters served by each team. Staffing patterns, including differential caseload sizes, were determined using a combination of past service utilization, outcome achievement, productivity standards, and desired best practice.

To implement the reorganization, staff were given options to work on the team of their choice. Clients were also informed of the reorganization and the accompanying changes. Transfers were made over a period of time and honored consumer choice. Reorganization of clinical teams began in December of 1998.

Cluster assignment data from the agency's MIS was used by their management team to establish interim transfer targets, monitor the transfer process, and make mid-course corrections as needed.

Over the first year, approximately 1,000 clients were transferred to newly established treatment teams. By mid 2000, nearly 90% of the more than 2,000 agency clients were being served by a cluster-specific team. Systematic use of the cluster-based information allowed the pace of staff and consumer transfers to be managed with minimal negative consequences.

Reorganization of clinical teams by cluster has shown evidence of several positive effects:

- Outcomes for clients are enhanced as service providers become more expert in serving clients who share common strengths, problems, histories, and life situations.

- Staff training and development efforts are more focused; job satisfaction improves; and staff burnout and turnover decline.
- Overall agency decision-making, goal-setting, and evaluation are also enhanced.

The agency also uses cluster-based data in its quality improvement efforts and in evaluating multiple services for specific clusters of clients. For example, a special study is in progress testing the effectiveness of more traditional counseling services for members of specific clusters. This study was designed by one of the new Cluster-Based Team Managers (who also manages the agency's counseling services), and includes comparison groups of individuals from the same clusters who do not receive counseling services. Because service, cost, and outcome data are collected on an ongoing basis on every agency consumer, data to test the effectiveness of counseling are readily available. Preliminary analyses are suggesting that while counseling may be very useful for members of certain clusters, it may actually be counter-productive for members of other clusters. Most recently, agency managers are talking about "Reorganization #2." Based on continuously enhanced cluster assessment information and a changing picture of admissions, the management team is discussing adding another team serving the two clusters of adults with co-occurring substance abuse and mental health problems. This would affect staffing of other teams as well as recruitment and staff development needs. As part of this reassessment, the agency is presently pursuing certification as a substance abuse provider with ODADAS. Since the reorganization, the agency has consistently met or exceeded county board productivity requirements.

Developing a Recovery Self Assessment Tool
Columbiana Mental Health and Recovery Services Board

As part of its recovery effort, Columbiana County (Ohio) developed a tool to help the Columbiana Mental Health and Recovery Services Board audit its operations from a recovery perspective.[9] The audit idea grew out of a desire to hold their Mental Health and Recovery Board's "feet to the fire" to ensure that Board operations fit with recovery principles. Their plan was to recruit an audit team made up of consumers, and to train that team in how to conduct audits.

[9] The Recovery Audit tool was developed by Pamela Hyde, J.D., Senior Consultant for the Technical Assistance Collaborative, consumers active in the Columbiana County (Ohio) Recovery effort, and staff of the Columbiana Mental Health and Recovery Services Board. Input from Martha Hodge, LISW, was also obtained.

CASE STUDIES IN CLINICAL RE-ENGINEERING continued...

The goal was for the audit team to review all 10 domains over a span of one year. Audit results would then be forwarded to the system-wide CQI Committee and to the Executive Director of the Board; the Executive Director would then report audit results to the Board of Trustees. The Mental Health and Recovery Services Board would be required to respond to any "findings" or suggestions of the audit team.

While the following audit tool was developed for examining the operations of a Board, the domains, methods and indicators are equally applicable to a provider agency.

Criteria for Recovery Audit of Board Operations - The 10 domains, along with indicators and methods to determine whether or not indicators have been met (in italics), are as follows:[10]

1. Board Governance

a. Consumers comprise at least 25% of Board planning and advisory groups.

b. Consumer participation is supported and respected by other members of the planning and advisory groups, per their report. Consumers will be able to identify examples of Board actions that included their ideas and suggestions. Information will be collected via consumer survey and/or interview by consumer audit team.

c. Board members are trained in recovery and can explain what recovery is and why it is the driving force for the Board's work, per results of annual training survey.

d. Board minutes reflect that decisions on new initiatives are in synchrony with recovery principles.

2. Human Resources

a. Consumers are actively recruited for job openings with the Board, and when hired, have equality in assignments, pay, and benefits, per review of recruitment records when openings occur.

b. Staff members are trained in Recovery and can explain what Recovery is and why it is the driving force for the Board's work, per documentation of staff training records and results of annual training survey.

[10]While the following audit tool was developed for examining the operations of a Board, the domains, methods and indicators are equally applicable to a provider agency.

3. Public Education/Community Relations

a. Community education materials are developed with input from consumers and include clear and concise information about recovery, per review of meeting minutes, and review of information used in community education materials.

b. Consumers are included routinely and consistently in community education activities, per "counting" educational activity, such as presentations, newspaper articles, etc., that are presented by consumers.

c. Consumers will feel more accepted in their communities, per their report, via focus groups.

d. The community at large understands and supports the Board's role in promoting recovery, per passage of the replacement levy in November 2000.

4. Provider Relations

a. Leadership and staff of provider agencies can explain what recovery is and why it is crucial to their success with clients, per results of the annual training survey.

b. The number and types of providers offer meaningful choice and alternatives for consumers, per report of consumers (focus groups).

c. Vocational, recreational, transportation and consumer operated services are sufficient in our community to support recovery, per consumers' report (focus groups) and results of treatment plan audits within provider agencies.

d. Provider contracts with the Board promote recovery in addition to the provision of billable units of Medicaid defined services, per review of contract language.

5. Finances

a. Consumers determine what they need to recover, and the Board contracts with providers that can meet those identified needs, per comparing needs and preferences as determined by consumers with amount and type of service actually delivered (focus group).

b. The Board seeks funds from non-traditional sources, such as local foundations, to promote flexibility.

c. The Board advocates with its primary funding sources: ODMH and the ODADAS, for flexibility in the use of funds, to ensure that what consumers determine they need to recover is paid for, per review of Mental Health and Recovery staff and Board meeting minutes.

6. Customer Relations

a. Consumers participate actively in the grievance/complaint process, per the inclusion of consumers in complaint/grievance resolution, and in the review/updating of the complaint/grievance procedure.

b. Consumers run advisory groups, such as the Recovery Steering Committee, exert appropriate influence on the system, per review of recommendations submitted to the Board, and what happens with these recommendations.

7. Management information Systems

a. Data collection and reports are meaningful and clear in measuring things that consumers consider valuable, per input from consumers who serve on the system-wide CQI Committee.

b. Data are used by decision-makers to make changes necessary to support recovery, per review of recommendations by the CQI Committee, and follow-up action, and per report of consumers who serve on the CQI Committee.

c. Consumers participate in data collection and data analysis, per tracking the inclusion of consumers as data collectors and analyzers within the CQI process.

d. Information derived from data and reports leads to services that promote consumer satisfaction and recovery, per review of consumer satisfaction data and service plan reviews conducted within agencies.

8. Quality management and Improvement

a. Consumers participate in quality improvement activities, per consumer involvement in the system-wide CQI Committee.

b. Quality improvement goals and processes reflect recovery principles, per review of CQI goals and processes.

c. Expected results are clear, measurable, and used by decision-makers, per review of follow-up actions to recommendations made by the CQI Committee.

9. Services

a. Mental health professionals function as helpers assisting consumers in their own recovery rather than as controllers of services, per feedback from the consumer satisfaction process, and per results of Recovery Research Project.

b. The services offered are those that consumers report are necessary for Recovery, and that are supported by research to promote recovery, per feedback from consumers and results of treatment plan reviews conducted within agencies.

c. Consumer participation in services leads to their recovery, per consumer satisfaction reports, and per information derived from ODMH outcomes process.

10. Planning

a. Consumers are active, equal partners in ongoing individual service planning, per results of the Recovery Research Project (available in calendar year 2002).

b. Consumers are active, equal partners in system planning, per number of different consumers who participate in planning efforts, and their reports re. the extent to which their input is valued (focus group).

c. Planning documents are written in common language with success markers identified and tracked, per review of documents.

Creating Consumer-Centered Intake Scheduling
Tacoma Comprehensive Mental Health Center

Before Re-engineering - One of the complaints voiced at the Comprehensive Mental Health Center in Tacoma, Washington was that there weren't enough slots for scheduling new consumers for intake, yet many of the slots that were available went unused. Basically, the organization operated a "staff-centered" model that worked as follows:

- **Staff Scheduling** - Clinicians identified blocks of time they were available for doing consumer intakes.
- **Consumer Scheduling** - Each consumer requesting services was scheduled into one of the available blocks.

CASE STUDIES IN CLINICAL RE-ENGINEERING continued...

- **Waiting List** - The scheduled intake times filled up quickly and new consumers were forced onto a waiting list that could push the scheduled intake appointment days or weeks into the future, in many cases to a point after the consumer's need for services ceased.
- Intake No-Show Rate - Approximately half (50%) of the consumers failed to show for the scheduled appointment and clinical staff were left with non-productive time on their hands.
- Clinical Records - For the consumers who did keep the intake appointment, clinicians and other staff began the process of opening a clinical record, including initial treatment planning.
- Subsequent No-Show Rate - Approximately half (50%) of the consumers who kept their intake appointments failed to show for subsequent appointments and staff had to complete termination summaries and close the clinical record.

Result - Without counting time spent in identifying, requesting, verifying, recording and filing ultimately unnecessary clinical record information, clinical staff ended up using on average four intake slots for every one consumer that entered active treatment. At the same time, many prospective consumers never received services because they could not get an intake appointment. After Re-engineering - Following is the "consumer-centered" model that the center used to address the problem:

- **Organizational Scheduling** - The organization now identifies blocks of time each day that are available for doing consumer intakes. During those identified times, which can vary on a day-to-day basis, the organization will see any prospective consumer who shows up.

- **Staff Scheduling** - The organization schedules staff on a rotating basis to cover the pre-defined intake times, in proportion to the expected consumer load (based upon past experience). Some staff are designated for "primary" coverage and others for "secondary" coverage. Primary staff can assume that they will be conducting consumer intakes, but can utilize any unused time for activities that can be interrupted if a consumer arrives. Secondary staff remain available for conducting consumer intakes, but assume they probably will not be needed on a normal day. Secondary staff can plan to use the time for tasks that can be interrupted, such as paperwork, telephone calls or correspondence.

- **Consumer Scheduling** - Each consumer requesting services is given the times during which the organization does intakes and is asked to come in at the first one that is convenient.
- **Waiting List** - Each consumer is seen as soon as his or her own schedule permits, thus simultaneously increasing access to the organization, increasing the probability that the organization can be responsive in crisis situations, and eliminating the waiting list for services.
- **Intake No-Show Rate** - The organization sees only those consumers who actually show for intake, effectively achieving a 0% no-show rate.
- **Clinical Records** - For those consumers who show for an intake appointment, clinicians treat the session as a brief intervention or walk-in, respond to the issues presented by the consumer, and schedule any appropriate follow-up. Minimal clinical record information appropriate to a brief intervention is obtained and recorded. Only when a consumer actually shows for a subsequent scheduled appointment (thus, signaling a willingness to follow through with treatment), do staff begin the process of opening a formal clinical record, including initial treatment planning.
- **Subsequent No-Show Rate** - Even if approximately half (50%) of the consumers who showed for an initial brief intervention fail to show for subsequent appointments, staff do not have to complete termination summaries or close the clinical record, thus saving extensive paperwork time.

Result - Staff productivity is better maintained. Clinical staff don't sacrifice identified intake slots for consumers who don't show. Little unnecessary time is spent in identifying, requesting, verifying, recording and filing ultimately unnecessary clinical record information. More prospective consumers receive services because they were able to meet with a clinician almost immediately after contacting the organization. Even in the case that the brief intervention weren't reimbursable by a third party, when compared to the lost time in the old model, the cost savings in the alternative model were still significant.

SYMPTOMS OF THE NEED TO RE-ENGINEER

The first myth of management is that it exists.
Robert Heller

Nobody really knows what is going on anywhere within your organization.
Unknown

Mental health organizations in need of re-engineering frequently show a series of symptoms that signal their situations. Most of those symptoms result from a lack of organization-wide attention when responding to issues that present themselves.[11]

Why Re-engineer? - Chaos to Order

Why re-engineer in the first place?

What's wrong with what we're doing now?

Why should we consider re-engineering our organization?

That depends. Organizations operate somewhere between chaos and order. Just exactly where your organization functions will determine whether you need to take a close look at how you do what you do and whether you have a consumer-centered organization.

How do you know if your organization is a candidate for re-engineering?

There's no simple answer, but there are symptoms that frequently occur in organizations that are in need of retooling.

[11]That is not to say that all problems are internally generated; many are externally imposed by parties such as ODMH. Well, there's good news; ODMH is beginning to work toward a more integrated service delivery model at the "mental health system" level. Through its Solutions for Ohio's Quality and Compliance (SOQIC) initiative, ODMH is working toward developing methods to achieve quality at the local provider level based upon clinical and non-clinical outcomes rather than through regulation of the service delivery process. Stay tuned. There's never been a better time to consider true, consumer-centered re-engineering.

Seven Sinister Symptoms of a Seriously Slipping System

Naturally, no single list could possibly encompass the range of symptoms that "seriously slipping systems" exhibit. However, some of the most frequently encountered symptoms include:

1. Layering of External Demands & Fragmentation of Function
2. Lack of Access to Quality Information
3. "Tribal" Orientation
4. Management by Crisis
5. Never Time to Do Things Right (But Always Time to Do Them Over)
6. We've Learned to Make Do ...
7. Staff Burnout & Turnover

Layering of External Demands & Fragmentation of Function

System - "A set of facts, principles, rules, etc. classified or arranged in a regular, orderly form so as to show a logical plan of classification or arrangement."

With organizational functions, the whole is much greater than the parts. Re-engineered processes that support effective consumer-centered decision-making are more than simple collections of separate and independent functions; they are a system. However, the procedures in many mental health organizations lack the characteristics one would expect to find in a system that was thought through in comprehensive fashion prior to its definition.

SYMPTOMS OF THE NEED TO RE-ENGINEER continued...

In no small part, the fragmentation is due to external demands. Increasing political pressures, decreasing funding, staffing limitations and other factors continually keep organizations in a state of flux. External factors are forcing organizations into managing, coordinating, responding to and/or participating in a number of separate initiatives and issues, including:

Consumer Recovery	Diamond
Emerging Best Practices	Behavioral Health Module
Consumer Outcomes	HIPAA
Quality Improvement	UFMS
Certification Standards	ORYX
SOQIC	

While you may not know what each of the above items entails, somebody in your organization probably does. In and of themselves, each of the above items (and the many that aren't listed) is important, and each requires (or produces) large amounts of information in order to be effective.

Unfortunately, in many organizations, the response has been to simply "layer" the demands of one initiative top of the requirements of all the others; there has been no coordinated plan for linking the demands of such independent initiatives into a single consumer-centered way of doing business. More specifically, they haven't taken the time to:

- analyze the organization's key challenges;
- define the key performance indicators to manage those challenges;
- minimize duplication of data collection and reporting;
- create policies and procedures to facilitate the timely capture and availability of the important information; and
- ensure that people know how to use information to make effective clinical and management decisions that lead to Consumer Recovery.

Lack of Access to Quality Information

Another common symptom that shows up in organizations is the tendency to operate without quality information for decision-making. While the lack of quality information can take many forms, you can feel fairly sure your organization is afflicted if you hear comments like the following:

- "I just can't keep up with all the information requests."
- "Those routine reports take forever to prepare."
- "I don't trust the information."
- "I get all these reports and I still can't tell what's going on."
- "Don't tell them that; they'll just use it against us."

Being unable to get to information has the same effect as not having the information exist in the first place. In thinking about the typical organization's lack of quality of information, one is reminded of the old story ...

First person to a friend in a restaurant, "The food here is terrible!"
The friend's response, "Yes, and such small portions!"

In other words, not only aren't the various information sources operating together optimally, but most people can't easily get to the information that is there. Thomas Jefferson, in his Report of the Commissioners for the University of Virginia, stated that the primary role of education is to "give to every citizen the information he needs for the transaction of his own business." If one accepts a parallel between the roles of education and organizational processes (a reasonable parallel in our opinion), then many mental health organizations are operating in failure mode, and must face the challenge of ensuring that their decision-makers have access to what they need to do their jobs.

"Tribal" Orientation

When functions are fragmented and quality information is unavailable, organizations lose focus. Individual programs "look after their own" and begin to concentrate less on how they are similar to the rest of the organization and more on how they are unique. They become independent "tribes" with their own histories, goals and rituals - factors that create barriers to consumer-centered re-engineering solutions.

SYMPTOMS OF THE NEED TO RE-ENGINEER continued...

In many organizations, programs operate autonomously without systematic review of how their own initiatives relate to the overall mission. Programs develop redundant information requirements and formulate symptom-oriented "solutions" for issues that arise. It's not unusual to encounter departments within a single organization generating forms, reports and procedures and using them independently of other programs. As a result, program staff often lack the overall information and supports they need and create coping mechanisms to get by. In addition, valuable mission-critical procedures that already exist run the risk of being ignored.

Often the primary focus is on departmental, internal mechanics, information, and details, and not enough on the broader vision of how those mechanics, that information, and those details link to the organization's mission, consumer recovery and the needs of the wider organization.

Management by Crisis

Another symptom of a need to re-engineer is apparent when people spend so much time putting out "brush fires" that they don't have the time to stop and ask where all the fires are coming from. Organizations are in a crisis management mode when they:

- never seem to have the time, resources or insight to anticipate organizational stressors;
- spend more time fixing problems than planning for new opportunities;
- feel they are continually on the "critical path" and have no slack time or resources available.

Never Time to Do Things Right

(But Always Time to Do Them Over)

Another key symptom appears in the guise of statements that begin with words similar to, "We don't have time to..." The following examples are typical of those frequently encountered:

- "It's something I could fix *if I had the time* to do it." [So instead, the problem recurs, consuming much more time and resources that any fix.]
- "I just *don't have the time* to re-engineer the system." [So instead, I continue to maintain my manual work-arounds, which are of limited value to me and no value whatsoever to others who may need the same information.]

"We haven't had time for training." [So instead, we continue to try to figure out each unique situation as it presents itself.]

In short, people end up spending significant amounts of their time involved in repetitive and duplicative activities - all the time insisting that they "don't have time" to do the real job at hand. The negative impact of such duplication of effort cannot be overstated.

We've Learned to Make Do ...

I'm fixing a hole where the rain gets in and stops my mind from wandering. ...
I'm filling the cracks that ran through the door and kept my mind from wandering. ...

And it really doesn't matter if I'm wrong, I'm right. ...

The Beatles

Much of what passes as basic, core methodologies in mental health organizations is actually a series of coping behaviors by a lot of hard working, well-meaning people. In order to do their jobs as well as they can, staff have developed their own procedures throughout the organization.

Why? Policies and procedures that aren't consumer-centered can appear disjointed and irrelevant to the people who are working with the consumers. Consequently, many of the people who have to make consumer-based decisions end up doing so without a great deal of support in the form of consumer-centered procedures, training or direction.

There is an interesting characteristic of people who work without proper support; when confronted with issues for which they don't see obvious answers, they tend to create "solutions" based upon what seems to work for their particular situation, rather than what the overall organization requires. Often, such "solutions" involve elaborate and time-consuming work-arounds and manual manipulation. Staff spend a large amount of time maintaining their own local "solutions" that, while working to a degree, are consuming inordinate amounts of time and resources. The end result is that staff end up doing everything that the organization requires first, and then do what they think really needs to be done for the consumer. To make things worse, the extra work they do usually works only for their specific

situations and does nothing to further the success of the organization; in some cases the work-arounds may actually conflict with the correct procedures.
In an organization that fails to organize around consumer-centered lines, there may be little recognition of the need for planning, training and professionalism in the implementation of consumer-centered procedures. Instead, there is a tacit assumption that issues are relatively minor (or obvious) and comprehensive training isn't required.

The result of such a training deficit was stated succinctly by one mental health center employee describing why she developed her own methods for solving problems instead of relying upon the organization's established system ...

"We've learned to make do with the parts of the system we've figured out."

Unfortunately, to a certain degree many mental health organizations are caught in similar situations.

Staff Burnout & Excessive Turnover

Staff burnout and excessive turnover are probably the most destructive and costly symptoms of all. At a minimum, staff changes are disruptive and expensive to the organization. On a more personal level they can be damaging to people's feelings about themselves and can create barriers to achieving consumer recovery.

Organizations that have staff who are giving up and bailing out should look closely at what can be done to minimize the factors that are wearing people down. The root causes of staff burnout and excessive turnover may not be under organizational control, but it's incumbent upon the organization to identify those causes and do what it can to alleviate them.

GEARING UP FOR RE-ENGINEERING

Engineer: *To plan and direct skillfully; superintend; guide.*

Mental health organizations that are characterized by the types of symptoms described in the previous chapter are faced with significant challenges. However, there is also great opportunity for positive change if re-engineering efforts are targeted toward problems instead of symptoms. While maintaining a focus on the consumers whom they ultimately exist to serve, mental health organizations should review the flow of information throughout their organizations, and take the lead in using information effectively for clinical decision-making. In other words—re-engineer a consumer-centered solution.

Crisis: Danger or Opportunity?

Given the commonly-occurring symptoms identified in the previous section, there can be little doubt that most mental health organizations are experiencing some form of organizational crisis. A great deal of time and resources are being invested in multiple interventions to address perceived issues, but those interventions aren't providing the organization with the results that a consumer-centered approach requires. In fact, in many cases the layers of interventions may actually impede quality care.

The Chinese recognize that a crisis has two components - one of danger and another of opportunity. They even reflect that distinction in their ideogram for the word, which is made up of the two separate ideograms for danger and opportunity. It would be easy to focus on the danger component of the current situation and just react to the problems (e.g., "we have this problem" or "we have that problem.") More difficult in the short term (and more rewarding in the long term), however, would be to focus on the opportunity component and develop a proactive plan for re-engineering internal processes to better address the consumer-centered decision making needs of the organization as a whole.

Fixes for Symptoms or Problems?

For every human problem, there is a neat, plain solution - and it is always wrong.
H.L. Menken

After even a cursory examination of all the issues facing mental health organizations, one is tempted to formulate solutions to the large number of specific issues identified. Even if such a response were feasible, it would still be inappropriate, because most of the items identified aren't problems, per se, but merely symptoms of other, more deeply rooted problems.

So should one handle each symptom with a quick fix (that's really not a fix), or step back and address the problem that created the symptoms in the first place? We believe that the latter approach is the only viable one.

Therefore, we do not recommend "fixing" each problem identified. Rather, the real re-engineering task is to: (1) review the role of information in the organization; (2) determine the information it needs to make effective and appropriate clinical decisions that lead to Consumer Recovery; and (3) revise the decision-making processes to provide the answers needed.

Re-engineering isn't an easy task; it will take a lot of time and effort. If you do it thoroughly, you may even make some people uncomfortable. But the stakes are high, and thoroughness is appropriate.

Re-engineering the Flow of Information

As part of your re-engineering effort, you will need to rethink the way information flows through your systems, whether computerized or not. Currently many people think of information systems as being peripheral to their "real" work. In other words, they first do the work they think is important and then record the information in the system. One of the problems inherent in such an approach is that because there is often too much "real" work to get done on a day-to-day basis, frequently the system doesn't get updated at all.

In the past, systems were often employed simply to record the way you did business. In a future where the individual consumer's needs and benefits are much more a part of the service delivery process, your organization's systems must become the way you do business. If you wish to have available the information

necessary to implement a consumer-centered system, you cannot think of information systems as being secondary to other tasks.

So how does all this translate into action? One way is to make sure staff no longer fill out paper that will be used to update the system later. Frame your procedures so that staff can update the system directly. If you need the information on paper later, let the system print it.

Rethinking the Flow of Information

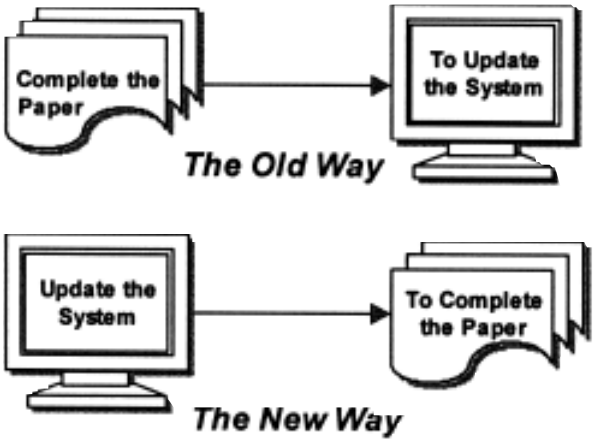

Such a transition will undoubtedly involve the implementation of emerging technologies such as remote e-mail, hand-held information entry devices, voice recognition, scanning, and other forms of communications. A review of these new business and decision-making tools should also be part of any re-engineering process.

If you restructure the flow along these lines, you will find that your system will no longer be an obstacle; it will become a companion on the road to Consumer Recovery.

Taking the Information Lead

In an earlier section, we discussed the Chinese ideogram for "crisis" and how opportunity was a key component. One of the foremost opportunities is being able to take the lead through the establishment of a consumer-centered decision-making process supported by a series of key performance indicators and reports. Such a process would pay dividends as the organization moves toward more strategic, long-term decision-making.

Strategic, consumer-centered, information-based decision-making need not stop at the local organization, however. Because of the common nature of MACSIS, variations of the reports and decision processes used within the individual provider could also be applicable at board and ODMH levels. Many of Ohio's mental health boards and providers demonstrate a wide range of sophistication in their use of information. However, all boards and providers in Ohio have the data set that exists in MACSIS as an information core. Some may have other systems also, but the information standard they share across the state is the standard set by MACSIS.

With foresight and planning, the opportunity exists to foster a common decision-making model that could be used for comparative management at any level of the mental health service delivery system. Such a move could help establish measures tied to consumer outcomes and emerging best practices, provide guidance to boards and providers faced with "reinventing the information systems wheel," and help ODMH realize its mission of helping ...

> *to establish mental health and recovery from mental illness*
> *as a cornerstone to health in Ohio.*

Re-engineering & MACSIS: A Brief Window of Opportunity

In an effort to account for services delivered to publicly-funded outpatient consumers, ODMH and ODADAS have implemented a state-wide management information system. Called MACSIS (for Multi-Agency Community Services Information System), the system is a multi-phased project as follows:

Diamond

The first MACSIS component is designed to track and reimburse services funded by public dollars.

Behavioral Health Module

The second MACSIS component is designed to capture demographic information ab

Consumer Outcomes - The third MACSIS component contains information on the mental health status or well-being for consumers, as measured by statements of the consumer, as well as perceptions of service providers and family members.

Data Warehouse

The fourth MACSIS component is designed to accept information Behavioral Health Module and the Consumer Outcomes System and combine it for reporting purposes.

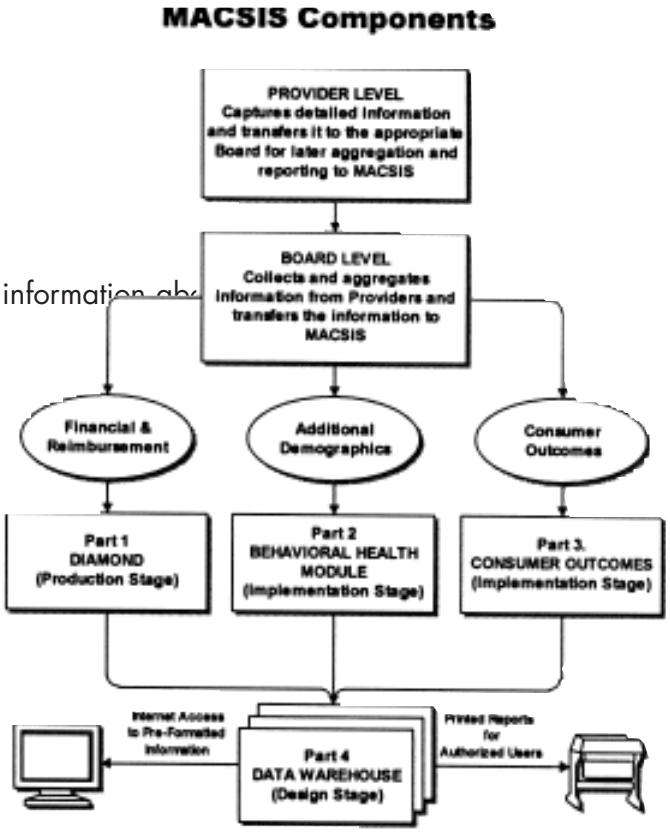

MACSIS is still relatively new. Soon, all components will be functioning together. How they function is the point that deserves attention, however. Right now, most people perceive the components of MACSIS as separate entities. Boards and providers send data to get paid and stay in compliance. For the most part, people "feed" systems because feeding is required. They get reports back that tell them what they sent, not what the information they sent actually means. In order to know what the information means, services and utilization data need

to be linked to outcomes data, consumer demographics, treatment history, agency cost information and other data sets that reside elsewhere in MACSIS. Facilitating such linkages should be a primary goal of re-engineering.

Timing is of the essence, however. If the components of any system are allowed to function as separate components for too long, there is a significant chance that users will write the larger system off as another necessary administrative system. They will then begin creating their own coping mechanisms for addressing the crises that face them in their day-to-day work. Once that happens, we may lose the opportunity to harness the more comprehensive potential of the system.

Evaluating the Costs of Re-engineering

The first 90% of the task takes 90% of the time and resources.
The last 10% of the task takes the other 90%.
90:90 Rule of Project Schedules

Re-engineering is expensive, and like other tasks a re-engineering project will probably consume more resources and take longer than expected.

There are different kinds of costs involved in mounting organizational changes such as a clinically-based reorganization. The highest costs are those related to the time and energy contributed by the people who will be involved in the re-engineering process. In addition, costs will also be seen throughout the organization as people become trained and begin using the various systems in the new ways.

Organizations will see offsets to these costs in the reduction of similar resource costs currently being incurred. And it is fair to assume that current costs are far higher than the re-engineered resource costs will be.

Consider:

- How many people are currently performing duplicate tasks?
- How many clinical staff are doing non-clinical-type work (e.g., manual reports)?
- Conversely, how much mainline production work are clinical staff forced to do that should be done by others?

- How often is the after-the-fact clean up of data the rule, rather than just the exception?
- What is the cost of potentially reimbursable time that is lost?
- What is the cost of widespread, high levels of inefficiency?
- What is the cost of frustration among professionals who feel bound up in poor reporting and administrative systems when they should be doing other work?

The hard question to be considered here is not so much, "What are the costs of proceeding with the re-engineering project?" The better question is, "What are the costs if you don't?"

RE-ENGINEERING PROJECT ESSENTIALS

When implementing any new project, there is frequently a tendency to just "lay it on" the staff once the development work is done and the decisions are made. As you might expect, as often as not the result is a failure of the new process. Is this the fault of the process? Of course not! Even the best re-engineered system is bound to fail if people neither believe in it nor use it.

Quite often, the biggest problem with the implementation process is that people don't give it enough thought. The implementation process is as complex as the development process and, in the short time span, more important.

Prerequisites

Projects don't get done just because you want them to. The very first thing you must determine is whether you are capable of undertaking a re-engineering project. What does it mean to be capable? At a minimum, you must have the following three things:

1. **Time** - You must have the time available for the project.
2. **Interest** - You must have an interest in getting the job done.
3. **Talent** - You must have the talent to do the re-engineering work.

If you don't have all of the above inside your organization, you must get it before you begin the job. If you can't find the missing factor(s) inside your organization, then you're not equipped to do the job yourself. Get some outside help!

Essentials for Project Success

... chance favors only the mind that is prepared.
Louis Pasteur

There are three major factors that must be present if the re-engineering project is to succeed:

1. **Administrative Mandate** - The first, and most important factor is the presence of an active administrative mandate to do the re-engineering project. This does not simply imply "permission" to do the project. Rather, what is required is an unequivocal statement by senior executive staff that the engineering project represents the will of the organization and is seen as a critical component of its ongoing development. As other staff members

are expected to participate and support the process, so should executive staff. Executive staff must be committed if the project is to succeed.

2. **Project "Champions"** - The project should designate key individuals who can function as a "champions" for the process. The "champions" are the individuals most closely identified with the project and the ones to whom other staff can turn for quick answers about the process. The "champions" should be knowledgeable in the components of the organization, and should also function as the ongoing technical consultants to the various Functional Teams (discussed later).

3. **Assertive Management Staff** - Once decisions are in place, your organization will require management staff who understand the decisions that have been made regarding the ways the results of the re-engineering project should be implemented. Those staff should be empowered to be active and assertive participants who can "ride herd" on the rest of the organization to keep the project operating efficiently on a day-to-day basis.

Stop Chasing Regulations

One man's red tape is another man's system.

Dwight Waldo

Rules and regulations - they're all around, and it seems at times that they control everything you do. How could anyone possibly re-engineer around consumer-centered principles in the midst of all the regulations?

It's a good question. What would be the best strategy for re-engineering a successful system that would be of internal clinical value and yet satisfy multiple batches of external regulations?

Interestingly enough, the best first attempt at dealing with regulations might be to ignore them completely (at least at first). Consider the following:

- The primary goal of mental health organizations is to provide services to people in need and to facilitate consumer recovery. Mental health organizations generally work very hard to organize the clinical process to make sure that the clinical services provided are of high quality and effective.

RE-ENGINEERING PROJECT ESSENTIALS continued...

- Because both people's lives and money are involved, mental health organizations must be accountable to regulatory bodies for the services they provide.
- For the most part, staff at those regulatory bodies are well-intentioned professionals trying to do their jobs to the best of their abilities.
- The jobs of regulatory bodies are focused on accountability of the clinical services provided. The one thing most mental health regulations have in common is that they are attempting to make sure the clinical services provided are of high quality and effective.

In other words, if you take a proactive view, the primary interest of both the mental health organization and the regulatory bodies is the same.

Given that fact, there is an important point here that should be stressed. If you begin by re-engineering a system around the clinical process in such a way that it provides the information necessary for consumer-centered decision making, you will find that the resultant process will probably meet most (if not all) outside regulatory and accreditation requirements.

Naturally, it would be nice to be able to assume that once your consumer-centered system was operational you would have addressed all the regulations. That would be unrealistic; there will always be unmet regulations, some of which will seem to have little obvious relationship with the work you do.

So, what should you do? Then, and only then, set up special procedures designed to address the regulations, per se. If those procedures don't fit comfortably within the clinical process, make sure your staff know that you are aware that the procedures are "add-ons" and that there's nothing that can be done to avoid them.

The whole point is to not start off responding to every regulation that is thrown at you. If you do, you'll never catch up; you'll just keep chasing the regulations and will have to change your internal processes every time the regulations change.

And they do change, don't they?[12]

[12]ODMH is currently re-writing administrative rules for mental health agencies, focusing on improved quality, reduced regulatory burden, and more meaningful accountability.

Tactics for Project Implementation[13]

As the art of employing available means to accomplish an end, tactics must match the eccentricities of a situation. The following suggestions provide some information about development projects that may help you adopt a stance that fits the style of your organization.

The tactics outlined presume that the organization's climate for a re-engineering project is favorable. Dealing with an unfavorable climate is another problem entirely and is not attempted here. That is the domain of an organizational or management consultant and one that would be taken on by an ethical consultant only under certain conditions. Organizations, like individuals, rarely benefit from therapy unless they are experiencing considerable pain and are motivated to undertake a process of change.

Tactic #1: Find an Impetus

An individual, even a manager, experiences enormous difficulty in launching a project single-handedly. The clever entrepreneur channels forces at hand in a particular direction.

Two hypotheses about organizational change may provoke thought: one, that most important decisions are made in a time of crisis; the other, that the major impetus for change comes from outside the organization. The main opportunities may lie in finding a pressing problem for which a consumer-centered re-engineering project may be an answer.

Consider a re-engineering project launched in the aftermath of the crisis of preparing for either HIPAA or a JCAHO certification review - lack of necessary information for planning purposes proved intolerable for the key staff. Drastic revisions in legislation, or administrative regulations, or funding agencies can cause organizational consternation, as can changes in leadership or organizational structure. Many threats to an organization's viability can be exploited in focusing attention upon a re-engineering project. Timing is of the essence in presenting a potential solution to a disconcerting situation.

[13]Adapted from Chapman, R.L., *The Design of Management Information Systems for Mental Health Organizations: A Primer* (1976).

Tactic #2: Prepare a Realistic Plan

Disciples of the "decision-in-the-time-of-crisis" school do their homework in advance and play a waiting game. Plans are brought out at an auspicious time, adapted to the circumstances, and introduced.

The plan should be explicit about:

- how the end result of the project will help solve the current crisis;
- what resources will be required (personnel and other costs); and
- providing a schedule of how the project will proceed.

The re-engineering process is phased into stages, with decision points at the end of each stage; lesser detail will be needed for latter steps but the initial phases should be outlined carefully .

The schedule must be realistic; it must take into account all the steps in the re-engineering process (and provide for some slippage due to unforeseen circumstances) but neither should it be drawn out. Uncertainties understandably make people reluctant to make commitments, but commitments are the legal tender for dealing with management. The schedule should also be phased to fit the organization's funding cycle if authorization for successive steps is not to be an impediment to a continuity of effort.

Then, the schedule should be met. The motivation to take those actions needed to produce the stated product on time, and within the allowable resources, must be present if credibility in the effort is to be achieved.

Tactic #3: Get Management's Commitment

Management must, of course, authorize the resources required if the re-engineering project is to proceed. The more clearly and fully the process is explained, the better management understands the implications of the project, the more likely its support can be maintained.

Authorization must be beyond providing the necessary resources for starting the re-engineering project - it must include a commitment to support the results of the project and facilitate their implementation. Acceptance of the results that lead to organizational changes is important, because when change does occur, it will tend to occur from the top down, not from the bottom up.

The more realistic a view top management takes of the costs and consequences of a re-engineering project, the more likely their continued enthusiasm is needed for achieving an effectively operating system. The prognosis for a meaningful re-engineering project is poor without the strength of this kind of management endorsement.

Tactic #4: Gain Staff Participation

The organization's staff must participate in the re-engineering process. Not only is this essential for the system to be acceptable to the people that must work with it, but personnel at all levels also have useful contributions to make. One mechanism for achieving staff participation is through the Re-engineering Steering Committee and Functional Teams (described later in this document). Members should be selected on the basis of their interest in the project and their experience in the organization so that knowledge of the full range of the organization's activities is represented and so that the re-engineering teams constitute an adequate communication link with the entire organization.

The first task for the re-engineering teams is to familiarize themselves with the organization, its personnel, its activities, its structure, its workload, and its resources. With this background, the teams can proceed to work through the re-engineering process. Because the re-engineering teams' function is to perform organizational re-engineering, each member must deal with the total organization rather than restrict himself or herself to a special aspect of the system.

Communication is at a premium both within the re-engineering teams and between the teams and the remainder of the organization. The complexity and level of detail demand that the implications of each recommendation be explored again and again for full understanding. Thorough documentation is a must in accumulating and integrating the decisions reached. In addition to obtaining information from different staff and consumers, and checking on the acceptability of specific recommendations, the re-engineering teams should issue regular bulletins to organization personnel explaining its progress and, in general, allaying incipient anxieties by keeping people informed.

Tactic #5: Stick to the Re-engineering Role

In the course of the project, the re-engineering teams will uncover conflicts and organizational problems of many sorts. Because of their motivation to help the organization improve its performance, members may be tempted to do a little unofficial conflict resolution and organizational repair on their own. These impulses should be resisted. The re-engineering teams should rely on the organizational hierarchy and operating mechanisms to solve problems. The re-engineering role is that of gathering information and summarizing it in a fashion that will permit the staff to identify problems. Unless the re-engineering teams restrict themselves to this function, they may focus organization tensions upon themselves and thus jeopardize the function they were assigned to serve.

Tactic #6: Tap Outside Expertise

Although talented and dedicated staff can do much of the re-engineering work, there are always inherent risks in a "do-it-yourself" project. The re-engineering teams may benefit from outside expertise at various stages in its deliberations: in orienting the group to its task; in design reviews; and as special problems arise. Qualified experts can be found among the ranks of consultants, of university staffs, and even of other mental health organizations that have undertaken similar endeavors.

In seeking assistance, the re-engineering teams should permit the expert latitude in exploring a domain of issues; often answers are sought for a specific question when the difficulty lies with an inadequate formulation of the problem - the issue may actually be elsewhere. The consultant offers qualifications in addition to his expertise; as an outsider he can view the situation with greater objectivity and can make representations both to management and staff that a re-engineering team member could do only at some peril to his continued acceptance by the organization.

Tactic #7: Conduct Project Reviews

Both the preliminary and detailed re-engineering phases culminate with project reviews. At each stage, the re-engineering teams should anticipate a number of iterations. First, the group should go over its conclusions and recommendations several times; in such a detailed process, anomalies emerge only gradually. Then, the design should be reviewed with key managers, both individually and in combination. The proposals should also be reviewed with the remainder of the

staff, again both individually and in combination. The reviews should concentrate on explanation of issues and upon meeting clinical, informational and operational needs. Design revisions to accommodate points that are raised should be avoided. By this time, the re-engineering teams acting as a whole will be best qualified to make decisions once all reactions have been obtained. Of course, defensiveness should be shunned or else valuable criticisms will be lost and staff resistance will rise. It may be necessary to cycle through review sessions several times, winding up with top management for final approval. The need for complete documentation and adequate communication cannot be overemphasized. Several documents with differing degrees of detail are required. Review sessions need supporting material that gets across salient structure and such specifics as workflow, consumer expectations and input document contents. The re-engineering teams themselves require detailed documentation, not necessarily structured for easy communication.

The Re-engineering "Danger Zone"

If a ... project is not worth doing at all, it is not worth doing well.

Gordon's First Law

People need to know where a project is heading if they are to invest the resources required to make it successful. The trick, then, is to figure out the best way to keep people enthusiastic about the ultimate goals of the re-engineering project such that their enthusiasm will carry them through the periods when things get difficult.You should not expect that the development of consumer-centered clinical re-engineering will be either quick or easy. On the contrary, such a project will probably tax both the patience and the commitment of your organization. Why is this so? The current operational structure in your organization, irrespective of whether it is addressing your real needs, is at least known quantity. People have learned to cope with its limitations. In other words, your organization is operating at or above some minimal level of functioning (even though it may not feel like it is).

As you begin the move to a re-engineered model of decision making, however, much of the time and energy that used to go into the old process will be transferred to the new. Then as procedures and processes begin to shift to the re-engineered approach, use of the old way of doing business will begin to drop off until it falls below what was once considered to be minimum functionality. The

re-engineered model, while headed for a higher functionality than the old methods, won't have reached the original minimum functionality. Therefore, it will seem like you haven't really gained anything; in fact, there's a chance some staff will feel that you're worse off than before you started.

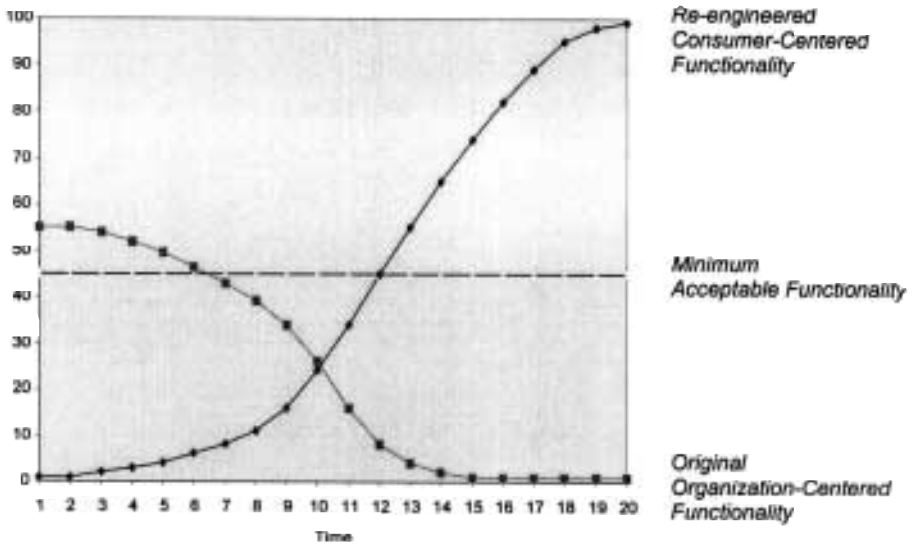

The triangular area below the horizontal line in the above graph represents the "danger area" where frustrations of all involved will peak. The old methods won't be doing what they used to do and the re-engineered model won't yet be doing much of anything. It is the point where it is most important to press on and avoid the temptation to "go back to the way we used to do it."

Frequently Asked Questions

The following questions are representative of ones you might ask or be expected to answer once you undertake a re-engineering project. The list is not all-inclusive, and in some cases, the information provided is duplicative of other materials located elsewhere in this manual. However, some of the answers may provide just that little piece of information you need for your project.

How does one weigh the relative merits of clinical vs. administrative needs when re-engineering?

You may be surprised to find out that consumer-centered processes designed to meet clinical needs often end up meeting administrative needs as a by-product. To understand this statement, first consider what accountability really means. Being accountable for what you do is being able to show another person or organization what you've done, and both why and how well you've done it. Because these concerns are also shared by the clinician, it follows that any re-engineered process designed to allow the clinician and consumer easy and unimpeded access to the right information will readily meet most (if not all) reasonable administrative and accountability demands. On the other hand, a process perceived to be primarily oriented toward administrative needs is unlikely to be adopted by clinicians as their own.

What is a good first step in getting a re-engineered system going?

Probably the most constructive thing you can do is to conduct a survey of staff and consumers to determine their positive and negative feelings about the existing system. This should be done before re-engineering work begins.

When the information comes back, make a list of the comments and address every item on it in some form. You don't have to solve every item, but at least address each one. Remember that you can't be all things to all people.

What is a good way to determine what information is needed for a re-engineered process?

When re-engineering a process, the design task proceeds in reverse. You start with the desired effects and work back to the specific processes, information and forms required.

RE-ENGINEERING PROJECT ESSENTIALS continued...

The first step is to set up a matrix similar to the following:

		Data Items Required (Unknown)			
		#1 ...	#2 ...	#3 ...	#4 ...
Desired Effect (Known)	Desired Effect #1 ...	✓		✓	✓
	Desired Effect #2 ...		✓	✓	
	Desired Effect #3 ...	✓		✓	✓

Label the rows with the desired effects you seek. Then create a column for each data item needed for each desired effect. (You may need a lot of columns!) By checking off the data items required for the desired effects, you will get an idea of the total number and nature of data items that need to be collected. You will also see where there are information overlaps among the desired effects. For example, in the example above, all three desired effects need the third data item (e.g., consumer address).

Once you have identified all the data items you will need, set up a second matrix similar to the one below:

		Forms Required (Unknown)			
		Form A	Form B	Form C	Form D
Data Items Required (Known)	Data Item #1 ...	✓		✓	
	Data Item #2 ...	✓			✓
	Data Item #3 ...	✓		✓	
	Data Item #4 ...				

Label the rows with the data items identified in the first matrix. Then create a column for each form you currently use. Check off the forms on which each data item occurs. When you are finished, you can use the results of the second matrix to determine the appropriate combination of forms required to accomplish the desired end products. You may also find a surprise or two. For example, in the limited example above, Form B apparently contains no data items identified as necessary to achieve the desired effects listed in the first matrix. Why do you keep Form B? Similarly, Data Item #4 isn't captured on

any current forms, even though it is necessary to achieve two desired effects in the first matrix. Do you need to add Data Item #4 to an existing form?

When conducting an analysis of this type, consider all forms and information together; don't simply consider the individual items to be justified or discarded. In this way you will be more likely to avoid biases caused by past habits (e.g., asking what data should be on the Intake Summary, instead of waiting to see if the process indicates that you even need an Intake Summary).

What about importing somebody else's re-engineered solution?

Other people's tools work only in other people's yards.
Jane Bryant Quinn

There is no question about the potential value of taking advantage of the re-engineering work done by others - it can save great amounts of time, money and other resources. It can also result in an ill-fitting and cumbersome system that does not fit your needs. Failures of imported processes and systems often result from differences between the organization where the process was created and the organization that later adopts and implements the process. However, there is another area that is not so obvious, that causes far more systems to come up short of expectations.

When systems are imported, there is a tendency to make "a few changes to improve the system's fit into our organization." Unless these changes are made carefully, the system may fail.

If the original system was well-designed in the first place, "minor" changes made by an outsider could destroy the integrity of the system. Therefore, a good rule of thumb is:

Import a system "plus" modifications for your organization.
Do not import a system "with" modifications for your organization.

Why is this true? A Gestalt point of view would say that the whole is greater than the sum of the parts. So it is with systems. A well-engineered system is more than just a bunch of unrelated processes that can be altered at will. Therefore, avoid shortcuts which "make it easier" unless you are sure that the imported system will still function as it should once the "shortcuts" are taken.

What is the proper balance between using in-house staff and outside resources in a re-engineering project?

Use of in-house resources is desirable both when re-engineering an existing process and when creating a new process from the ground up.

- In the first instance, in-house staff often are the only ones with enough knowledge of the problem and the structure of the existing process to make constructive suggestions for corrections.
- In the second instance, in-house creation of a totally new process provides complete control of the re-engineering process, thus avoiding much trial and error.

However, outside consultants can be helpful in several ways:

- They have experience that can help you avoid common mistakes that consume both time and energy.
- They task-orient for those of us who aren't task-oriented.
- They can organize vague areas so they make sense.
- They provide "window dressing" even when not used for design work.

Remember that no man is a prophet in his own land; it is often handy to have an outside "expert" available to endorse your re-engineered process.

How elaborate a re-engineering project should you undertake?

In most situations, an investment of 20% of the resources required to accomplish the whole job will accomplish 80% of the job.

Vilfredo Pareto's 20:80 Rule

It should be food for thought that a huge organization like the Kentucky Fried Chicken chain has used for its motto:

KISS
Keep it short and simple.

Whatever you choose to do, don't overdo it. Don't try to build a system that will anticipate any clinical issue that might ever be thought up. If you're implementing a re-engineered process, it should be because there was some "sickness" in the old system. Then, when the sickness is gone, stop the cure. Don't create a process that imposes permanent solutions to temporary problems.

Any final thoughts?

OK, here goes ...

1. Staff attitude will be the major obstacle to implementation.
   Don't be alarmed if the initial reaction to proposed changes in clinical processes is negative. This is quite normal.
2. In order to get your system across to staff, identify the "natural leaders" and get them on your side. Start small. Don't try to light a log with a match. Get some kindling.
3. Use a reward-oriented approach when implementing change. Don't just drop a bomb on people. Remember that your staff are human, too!
4. If something in the system doesn't work the first time, first assume that the process is wrong, not just the person who is trying to make it work.
5. Work with your staff so that they will help you build a consumer-centered process that gets used "because it works," not just "because it's a rule".
6. "Face validity" is extremely important. Does the re-engineered process really look like it will do what it's supposed to do? If people think, "This can't possibly work" they will invest little effort to make it succeed.
7. Finally, imposition invites opposition, so call the re-engineering process an experiment, no matter how permanent it is.

HELPFUL RE-ENGINEERING TOOLS

Give a small boy a hammer and he will find that everything he encounters needs pounding.

Abraham Kaplan

Using the right tool in the right place can make a difficult job easy. That statement is as true when undertaking an organizational re-engineering project as in any other endeavor.

Two of the most important processes most people encounter in organizational projects are the setting of goals and dealing with people who don't perform as expected. How those two areas are handled can easily make or break the most worthy of projects.

Therefore, this chapter outlines two techniques that can be used to help you over these two potential rough spots.

- **Organizational Goal Setting: A Results-Based Approach**
  The technique described provides a structured approach to setting organizational goals that are based upon the effects you're trying to achieve (e.g., Consumer Recovery), as opposed to simply revising goals for existing programs that may no longer be relevant in our world of change.
- **When Things Go Wrong: Analyzing Staff Performance Problems**
  The technique described provides a straightforward process to help assess the nature of people "problems" that occur in organizations, and then determine the appropriate intervention to keep the project on track.

Organizational Goal Setting: A Results-Based Approach

After all, there is a difference between living in some kind of day to day chaos where there is no hierarchy to your thoughts ... and knowing in advance the whole conclusive order ...

E.L. Doctorow

Mental health organizations have changed during the past decade. Small, storefront organizations have expanded, and more established service providers have grown into non-profit corporations employing hundreds of individuals. At the same time, costs have increased and revenues have flattened, and in some cases declined. Together these factors have created pressures to maintain core mission while streamlining work processes.

You might assume that along with such pressures would come an increase in the sophistication of the techniques used to manage service organizations. On the whole, however, this has not occurred. The mental health world has repeated many of the basic errors committed by the private business sector by assuming that the transition from small to large organizational structures was merely a question of size. Now, as funding dollars have become tighter, the fallacy of this assumption has become painfully evident.

To compound the issue, there has been a tendency in the past to fill the leadership roles of mental health organizations with clinicians who have risen through the ranks instead of with individuals with stronger backgrounds in administration and management. Partially because of this, the management style of those organizations has frequently been one of "management by crisis" where critical issues are dealt with as they arise, governing boards and management staff fight each other for territory, and goals and objectives are generated more for accountability to others than for direction for the organization.

If organizations are to survive, they will have to become more efficient, better managed, and a more successful candidates for future funding than their competitors. An effective results-based technique for setting organizational goals is a tool that can facilitate the re-engineering process.

The Old Way: Cost and Budget-Based Goal Setting

Tradition often drives the goal setting process in organizations. The process goes something like this:

- Cost - What did the program cost last year? What do we think we'll get next year?
- Program - How can we use those funds in our existing programs?
- Services - What services did those programs deliver last year? How many will we have to deliver next year to capture the funds?
- Result - We'll accomplish what we can.

Granted, the above is a pretty simplistic view, but unfortunately it's also pretty accurate for a lot of organizations.

When planning is based purely on the funds that are available, the results tend to be passive, after-the-fact, and often have little relationship to consumers and their recovery. Existing programs and services are maintained blindly, and funding is viewed simply as fuel for the existing organizational engine. The status quo guides the future.

The New Way: Results-Based Goal Setting

Result: 1. *a) Anything that comes about as a consequence or outcome of some action, process, etc. b) the consequence or consequences desired.*

We tend to think about "results" as being an end product of a process. While that's appropriate in most situations, when it comes to planning and goal setting, results should be the first step in the process.

Knowing the intended results before you start is the fundamental "given" for an effective planning process.

There's a delightful exchange in Lewis Carroll's Alice in Wonderland in which the Cheshire Cat illustrates for Alice the problem inherent in proceeding along a course of action without already having the result in mind:

"Cheshire-Puss," she began,... "Would you tell me, please, which way I ought to go from here?"

"That depends a good deal on where you want to get to," said the Cat.

"I don't much care where," said Alice.

"Then it doesn't matter which way you go," said the Cat.

"So long as I get somewhere," Alice added as an explanation.

"Oh, you're sure to do that," said the Cat, "if you only walk long enough."

In other words, if we hope to arrive at any destination close to where we'd like, we have to make our journey within the context of a plan, and that plan needs to be focused on our desired results; simply weaving together multiple answers to multiple questions won't suffice.

When planning is based on desired consumer results, the conclusions are proactive, and are based on consumers and what is needed to support their recovery. Programs and services are innovative, fluid, and change as the results-based goals direct. The status quo has little or no link to the future. Costs, once the first step in the process, are now at the end where they belong.

and the first one now will later be last for the times they are a-changin'
Bob Dylan

The Technique

The following pages outline a goal setting technique that can be used to create an organization plan that is concise and understandable (and best of all, free of those endless pages of narrative that usually comprise organizational plans).

The goal setting process should be undertaken as a cooperative effort between staff of the organization, consumers and family members, and the governing board.

Basically, the technique[14] prescribes: (1) the stating of overall objectives, which are then prioritized; (2) the establishment of a perfect score for measuring complete achievement of the objectives; (3) the specific criteria to be used for measuring less than perfect progress toward meeting of the objectives; (4) a statement of the programs or interventions to be used to accomplish the objectives; (5) and a notation of the cost of that program or intervention.

1. **Introductory Statement**
   Central to the technique is an introductory statement that guides the structure of every goal statement. All goals should begin with the phrase, "Reduce toward zero, and/or resolve successfully ... " The format is important, as it avoids subjective assessments such as "more" or "less" and provides a fixed target against which to measure progress.
2. **Desired Effect**
   Identify each desired effect to be achieved by the organization and restate the effect in the form of the introductory statement (e.g., "Reduce toward zero, and/or resolve successfully, psychosocial distress experienced by youth.") Once all the issues are identified, they should be prioritized.

[14]The technique is adapted from unpublished work conducted by a group from Applied Human Service Systems of the Florence Heller School at Brandeis University. It was discussed in the midst of a series of talks on the application of systems technology to human services.

3. **Perfect Score**
   Once the desired effects are identified and prioritized, the next step is to ask, "What is the best we could do in each area?" In other words, if it were possible to achieve totally the desired effect, how would we know when we got there?

   In the current example, there are at least two perfect scores. We will know we have reduced to zero, and/or resolved successfully, psychosocial distress experienced by youth when: (1) every youth in need of services receives services; and (2) every youth who receives services exits the system as a success.

4. **Measure**
   Any goal or objective must be measurable. (If objectives weren't meant to be measurable, they would have been called "subjectives.") The next step is to describe how we are going to measure progress toward each of the perfect scores.

   In our example, the measure for the two perfect scores would be: (1) the percentage of youth in need who are served; and (2) the percentage of youth who receive services who exit the system as a success.

   For the first measure, the only way we can know the percentage of youth in need who are being served is by first knowing the number of youth in need, and that requires some form of needs assessment.

   Obviously, for the second measure we need a definition for what constitutes a "success" before we can measure progress. One approach might be to implement the Ohio Mental Health Consumer Outcomes System and establish internal criteria for what constitutes a "success" based upon change in outcomes scores.

5. **Program**
   Now that you know where you're going and what you want to achieve, it's time to determine what programs and interventions would be most appropriate to achieve the goal.

6. **Cost**

Once you have determined what programs and interventions are required to achieve the desired effect(s), then (and only then) should you make the determination of what the program would cost.

The overall organizational costs will be the total of the costs of all the individual desired effects. Unfortunately, if you're like most organizations, the total cost may exceed the funds you have available. If that is the case, it's time to sharpen your pencil and review the components of your plan. Remember, in any project there are three characteristics that determine how the job can be done - scope, quality and cost.

- Scope - The number and scope of the desired effects may need to be reviewed. Approaches to scope reduction might include reprioritization of desired effects and/or removal of low priority desired effects from the plan.
- Quality - The quality standard used in defining programs and interventions may have to be reviewed. Obviously, we wouldn't lower the quality standard of any given service, but the overall service mix of services might have to altered. There may simply be services and activities we cannot afford to include.
- Cost - The total cost of the project may have to be adjusted. Approaches to revenue enhancement might include exploration of alternative funding sources and/or negotiating reimbursement for previously non-reimbursed services and activities.

The key project characteristics - scope, quality and cost - are not independent. Changes in any one (or two) affect the third. In other words:

Any given Scope and Quality determine the Cost

Any given Scope and Cost determine the Quality

Any given Quality and Cost determine the Scope

Therefore, you must be very careful if you change more than two of the characteristics in any revision of your plan.

Process Flow

The diagram below outlines the Results-Based Goal Setting flow for a sample goal statement. A typical organizational plan might have five to ten such goal statements.

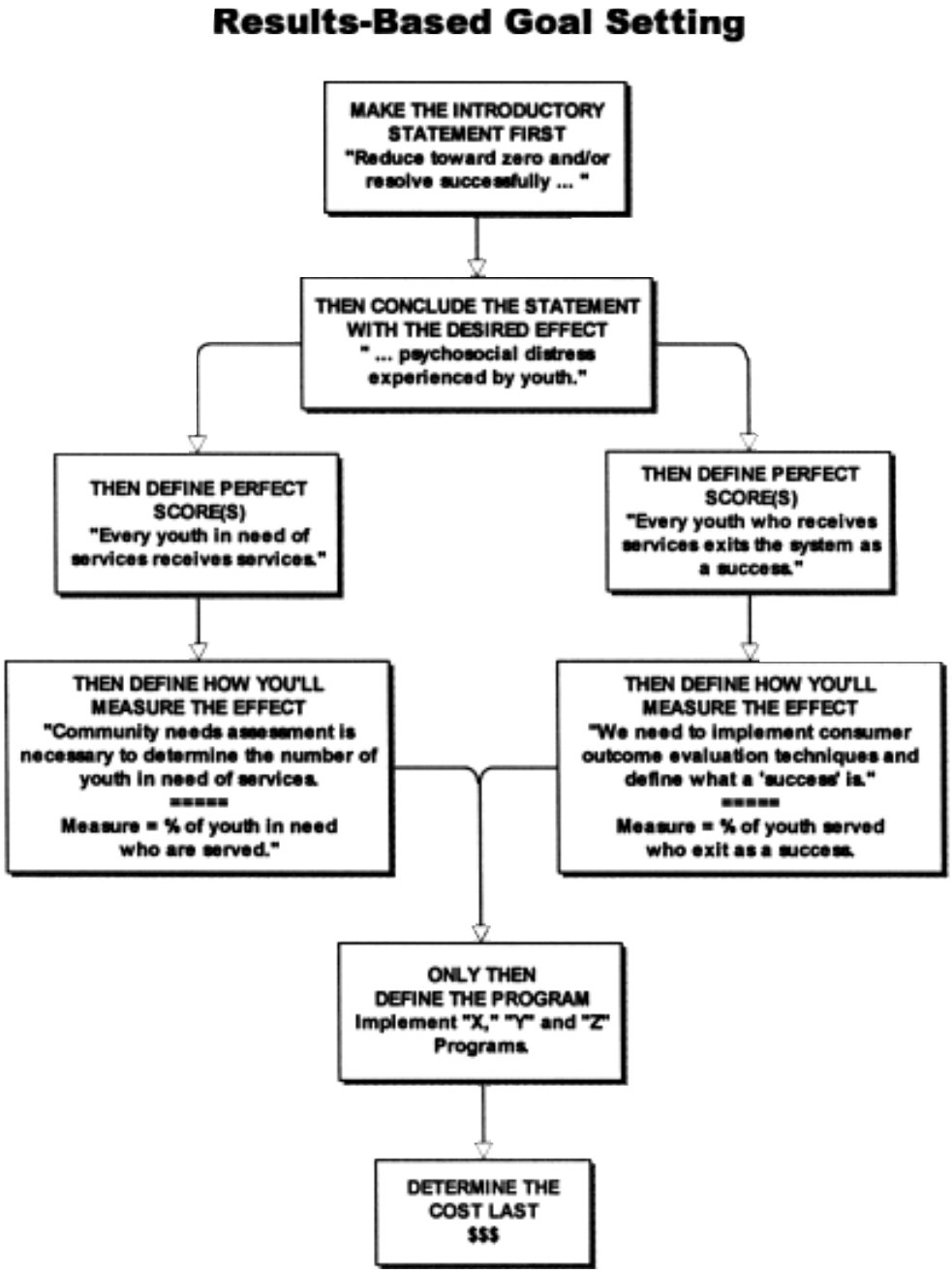

The encounter with such a specific planning technique may leave its mark upon the organization, the net result of which may be better and more appropriate work plans, higher levels of staff comfort and participation, and a much better planned and managed mental hea1th organization.

Advantages and Disadvantages

While the results-based goal setting technique is almost invariably a positive one, like any other technique, it is not perfect. Following are some of the positive and negative features of the technique in the real world. These are observations based on the application of the technique in a mental health organization and are made in the 20:20 vision of hindsight. Hopefully they can be of help to others considering introduction of a similar approach in their own organizations.

Advantages

1. A simple and straightforward technique allows a governing board of lay people to make clear and concise statements of organizational objectives.
2. An effects-based technique can help keep the board from becoming perplexed and overwhelmed by esoteric program issues.
3. The process ensures a division of labor between goal setting and programming. With the board responsible for the former and the staff responsible for the latter, there is a clarification of board/staff responsibilities.
4. The process avoids problems inherent in having a single individual generate a work plan narrative from a position insulated from input.
5. Planning follows a logical order. Through its sequential and step-by-step order, participants are kept from getting too far ahead of the process, thus avoiding the pitfall of program territoriality and its resultant bias.
6. The process uses "Reduce to 0..." statements rather than "Reduce/increase to some quantity X ..." statements. Thus, measures of effectiveness are tied into some absolute quantity instead of an arbitrary figure. As a result, you become your own baseline and can better measure progress over time.

7. The overall focus of the process is at all times on "What is the ultimate goal of the organization?" The original objective is always in sight and is not easily overlooked.
8. By structuring the goal setting process in the order shown in Figure 1., it is possible to define almost all planning concepts without knowing exact budgetary figures.
9. The process constitutes an easily generated, task-oriented, five-part system that is both logical and sequential.
10. Management and program staff are able to make program changes wisely and appropriately because the overall focus of the program is readily visible.
11. Methods for measuring the effectiveness of a program are defined before the program itself is actually planned. The technique keeps one from getting swallowed up in trying to measure secondary effects (programs) rather than primary effects (desired impact).
12. Given a desired impact, the definition of an appropriate evaluation measure becomes relatively simple.
13. By examining each of the prioritized goals in the same method (desired effect, perfect score, measure, program, etc.), the commonality of types of measurement for differing objectives is often made evident.
14. The technique can be applied rapidly even in extremely complex organizations.
15. By breaking up the planning process into its component parts, planning can be generated through division of labor at different levels within the organization; board, management, and staff each contributes their part to the whole process.
16. The establishment of measures related to the desired effects often points out a necessary division of labor among various governance levels (e.g., state, county, city). For example, the measure in the diagram related to needs assessment is one that, for reasons of insufficient resources, cannot usually be addressed by an individual organization. The leading role in such a situation must be played by some larger entity such as the state or board.

17. A clear goal-setting process ties almost all activities into a single "organization" rather than a proliferation of programs.
18. The overall focus and desired effects of the organization are now clear and concise.
19. Staff members can easily see where they fit in the overall scheme of things. As a result, the morale and comfort level of organizational personnel can be increased.
20. Because of its simple and straightforward nature, the technique makes it easy to communicate the organization's aims to members of the community.
21. With a clear and simple approach to planning, one can neither hide from nor cover up one's own mistakes. Everything is straightforward and clear.

Disadvantages

1. The technique maintains its own terminology that is not usually the a priori terminology of staff.
2. Individuals not familiar with the procedure may confuse the "perfect score" with the program objective.
3. Staff are often used to thinking in program terms rather than in terms of overall organizational objectives. Thus, there is a chance for the introduction of some artificality and territoriality in the earlier, more abstract parts of the process.
4. The technique can place less emphasis on "enhancement of mental health" and more emphasis on problem areas.
5. It is often difficult to assess adequately the qualitative value of program gains. How does one truly evaluate movement toward zero as stated in the introductoory statement?
6. Conveying the details of the approach to a governing board of lay people can be a difficult task.

7. The expertise and technology of the technique frequent reside at the wrong administrative level. Planning of this nature should also be done at higher levels than the individual mental health organizations (e.g., board, state). If the planning does not occur at a higher level, continuity between separate service providers may be impeded.

When Things Go Wrong: Analyzing Staff Performance Problems

It must be remembered that there is nothing more difficult to plan, more doubtful of success, nor more dangerous to manage, than the creation of a new system.

For the initiator has the enmity of all who would profit by the preservation of the old institution and merely lukewarm defenders in those who would gain by the new ones.

Machiavelli "The Prince" (1513)

People don't do things for a lot of reasons. Despite your best intentions, things won't always work out the way you want. Expect problems. Take a close look at Murphy's Laws and consider them seriously. You will no doubt have to deal with each of them before the re-engineered system is functioning smoothly.

Murphy's Laws

- If anything can go wrong, it will.
- Nothing is ever as simple as it seems.
- Everything takes longer than you expect.
- If there is a possibility of several things going wrong, the one that will go wrong first will be the one that will do the most damage.
- If you play with something long enough, you will surely break it.
- If everything seems to be going well, you have obviously overlooked something.
- If you see that there are four possible ways in which a procedure can go wrong, and circumvent these, then a fifth way, unprepared for, will promptly develop.
- Nature always sides with the hidden flaw.

- It is impossible to make anything foolproof, because fools are so ingenious.
- If a great deal of time has been expended seeking the answer to a problem with the only result being failure, the answer will be immediately obvious to the first unqualified person.

Unfortunately, many of the problems you will probably encounter won't be the simple, mechanical ones. Rather, the significant issues will usually occur when other people don't do something you think they should. Now those are problems!

Or are they?

The following diagram[15] outlines a simple process to apply when you encounter people "problems."

Analyzing Staff Performance Problems

[15]Adapted from *Analyzing Performance Problems*, or *'You Really Oughta Wanna'* by Robert F. Mager and Peter Pipe (1970). This is a marvelous little book that is highly recommended. It is currently available in a 1997 revised 3rd edition.

The Process

The process starts off by rejecting the term "problem" itself and encourages the use of the term "performance discrepancy." In other words, you start off by simply identifying that something isn't as you expected it to be; you have a performance discrepancy.

Now it's time to analyze what's really happening by asking yourself a series of questions.

1. **Importance** - First of all, is the dicrepancy important? If it is, continue; if not, forget about it and concentrate on something else.
2. **Skill Deficiencies** - If the discrepancy is important, determine whether the person has the potential to perform as desired. Ask questions like:
   - Could the person do the job if he or she really had to?
   - Could the person do the job if his or her life depended on it?
   - Are the person's skills adequate for the desired performance?
   - Could the person learn the job?
   - Does the person have the physical and mental potential to perform as desired?

- Is the person over-qualified for the job?
- Did the person once know how to perform as desired?
- Has the person forgotten how to perform as desired?

If the discrepancy is due to a skill deficiency and the person has never performed the task, arrange for training.[16] If the person used to be able to perform the task, but didn't do it often, arrange for feedback. If the person used to be able to perform the task, and did perform it often, arrange for practice. If the discrepancy is not due to a skill deficiency, you need to ask a few more questions.

3. **Is the Desired Performance Punished?** - Does the desired performance lead to unfavorable consequences? Ask questions like:
   - What is the consequence of performing as desired?

[16]Note that this is the sole situation where formal training is the appropiate response. Actually, there's a simple rule of thumb for determining whether training is necessary — If you put on your best Regis Philbin suit and offered a person $1,000,000 to do the job, could he do it? If the answer is yes, he doesn't need to be trained; he already knows how to do the job. Any performance discrepancy is due to something else.

- Is it punishing to perform as expected?
- Does the person perceive desired performance as being geared to penalties?

If the desired performance is punished, remove the punishment. For example, we want people to come on time to meetings, but those who do often have to wait around a half hour before the latecomers arive and the meeting starts. The desired behavior (i.e., coming on time) is punished (i.e., you wait) and the non-desired behavior (i.e., coming late) is reinforced (i.e., meeting starts right away). The solution? Start meetings on time and don't repeat material for latecomers. You might also arrange to have some positive reinforcement such as refreshments available at the beginning (and only at the beginning) of meetings.

4. **Is Non-Performance Rewarded?** - Determine whether non-performance or other performance leads to more favorable consequences than would desired performance. Ask questions like:
   - What is the result of doing it the person's way instead of the desired way?
   - What does the person get out of the undesired performance in the way of reward, prestige, status, or jollies?
   - Does the person get more attention for misbehaving than for behaving?

   If non-performance in rewarded, remove the reward. In the above example, starting the meeting on time places the latecomer in the position of arriving obviously late, and not repeating the material places the latecomer in the awkward position of not knowing what has transpired to that point.

5. Does the Desired Performance Matter? - Determine whether there is a meaningful consequence for the desired performance. Ask questions like:
   - Does performing as desired matter to the person?
   - Is there a favorable outcome for performing?
   - Is there an undesirable outcome for not performing?
   - Is there a source of satisfaction for performing?
   - Is the person able to take pride in his or her performance, as an individual or as a member of a group?

- Does the person get satisfaction of his or her needs from the job?

If the performance doesn't matter to the person, arrange consequences for behaviors. In other words, make it matter. For example, completing out comes instruments takes time and effort. If nothing is ever done with the information other than sending it on to the board and ODMH, and nobody bothers to check to see if the instruments are even administered, people will stop using the instruments. The solution? Create a process whereby out comes information from the instruments is available as soon as the instruments are completed and make sure staff understand how to use the information in treatment planning.

6. **Are there Other Obstacles?** - Determine whether there are obstacles preventing the desired performance. Ask questions like:

- What prevents the person from performing?
- Does the person know what is expected?
- Does the person know when to do what is expected?
- Are there conflicting demands on the person's time?
- Does the person lack the authority? ... the time? ... the tools?
- Is the person restricted by policies or by a "traditional way of doing the job" that ought to be changed?
- Are there competing factors such as phone calls, or other demands of less important but more immediate problems?

If there are other obstacles, figure out what they are and remove them. For example, if people can't find copies of the appropriate outcomes instruments when they need them, they are unlikely to administer them on time. The solution? Make sure copies of all appropriate instruments are available when needed.

Like all models, the above method for analyzing staff performance problems is an approximation, and relates only to those items over which you have some control. Not included are external factors imposed by others that simply may not be able to be done at all.

RE-ENGINEERING TEAMS

The work of re-engineering, as James Madison said of creating the Constitution, is not "the offspring of a single brain. It ought to be regarded as the work of many heads and many hands."

Likewise, any re-engineering project should draw upon the knowledge and experience of a variety of people related to the organization, including consumers and family members. The process should be under the control of a Re-engineering Steering Committee, which directs the Re-engineering effort with the help of a series of Functional Teams that specialize in specific areas.[17]

Re-engineering Steering Committee

The Re-engineering Steering Committee is chartered to guide and monitor the re-engineering project. The charter extends beyond the immediate project and extends to cover ongoing organizational development and evolution over time. The optimal Re-engineering Steering Committee operates according to the following guidelines:

Small, High-Level, Multi-Disciplinary Committee

The Re-engineering Steering Committee is small, composed of individuals who are high enough in the organization to make binding decisions, and representative of the diversity of programs, disciplines and consumers that make up the organization.

Mission-Centered

All of the actions of the Re-engineering Steering Committee are designed to further the organization's mission.

Consumer & Recovery Focused

In the decisions of the Re-engineering Steering Committee, the organization's consumers are the primary focus; the organization as a program is secondary. Therefore, the focus of the Re-engineering Steering Committee is consumer and recovery based, not organizational-based. In other words, the first question is, "what does the consumer need for Recovery," and not "what does the organization need?" At all times, emphasis is placed upon finding the best way to do something, not simply focusing upon how it is done today.

[17]This chapter provides guidance for local agency and board level re-engineering projects. However, the information is provided in the context of the ODMH SOQIC initiative, which will have impact in every one of the re-engineering teams. So do your work, but keep your eye on SOQIC so you can benefit from its products and avoid duplication of effort.

Quality Improvement Focus
The Re-engineering Steering Committee focuses on Quality Improvement throughout all of its activities, and is responsible for ensuring that Quality Improvement is a key component of the work of each of the project's Functional Teams.

Global Policy & Procedure Development
The Re-engineering Steering Committee is responsible for establishing policies and procedures related to the organization as a whole (e.g., completion and timeliness of information gathering, use of clinical information for decision making).

Administrative Mandate
The Re-engineering Steering Committee is responsible for communicating and reinforcing the administrative mandate for the project.

Setting Expectations
A major objective of the Re-engineering Steering Committee is to set the organization's expectations regarding the re-engineering process. There should be no doubt among staff regarding the importance and global nature of the project.

Formal Re-engineering Plan
In an effort to keep the project on schedule and avoid being diverted by tangential issues, the Re-engineering Steering Committee manages the project through use of a formal Re-engineering Plan.

Periodic Plan Review
The Re-engineering Steering Committee periodically reviews progress on the Re-engineering Plan and release updated copies.

Re-engineering Functional Teams
No single group can do all the tasks required to re-engineer an organization. Therefore, the Re-engineering Steering Committee relies upon multiple Functional Teams that are focused upon specific functional areas of the organization. Although the focus of the re-engineering effort is on consumer-centered areas of the organization, decisions will need to be made related to all parts of the organization.

Typical Functional Teams for a re-engineering project might include:

- Clinical Decision Making & Documentation
- Outcomes & Utilization Review
- Consumer Financial Eligibility & Authorizations
- Consumer Financial Services
- Contracts Management
- Executive Information

Each Functional Team operates according to the following guidelines:

Multi-Disciplinary Membership
The Functional Team is a small, multi-disciplinary group of people who are knowledgeable about the Functional Team's area(s) of responsibility. Membership extends beyond the "obvious" people (e.g., clinicians on clinically-oriented teams), and includes the variety of staff and consumers who interact with the Functional Team's area(s) of responsibility. To help maintain project continuity, the Functional Team contains at least one member of the Re-engineering Steering Committee.

Consumer & Recovery Focused
The Functional Team's focus, at all times, is upon the consumer and his or her needs for Recovery. As is the case of the Re-engineering Steering Committee, The Functional Team is targeted on consumer Recovery and the organization's mission statement.

The Functional Team's first question is, "what does the consumer need for recovery," and not "what does the organization need?" Basically, the following questions need to be addressed:
What decisions need to be made? What information is needed by whom, when, and in what form? How do we capture the information? Who collects it? What Policies & Procedures will be required or affected?

Quality Improvement Focus
Each Functional Team focuses on Quality Improvement in all of its activities. Each decision and recommendation is considered in the light of its role in the general improvement of quality throughout the organization.

High-Priority
Functional Team tasks are a high priority for the organization. Participation in a Functional Team is not perceived as work to be done in addition to the normal job. Rather, such participation is seen as one of the most important parts of the job.

Topic-Specific
Each Functional Team is topic-specific. The Functional Team concentrates on its areas or responsibility and avoids overlapping into other Functional Teams' areas. Where overlaps occur, the affected Functional Teams jointly determine how the overlap will be handled.

Task-Oriented
Each Functional Team is task-oriented. Functional Team meetings are not designed to be either "blue sky" or "gripe" sessions that merely rehash the complaint du jour.

Regular, Scheduled Meetings & Minutes
Each Functional Team maintains a regular schedule of meetings, with accompanying expectations of achievement of goals. To reinforce the importance of the task and prevent loss of momentum, Functional Team meetings are at set times (chosen by the Team), with the time slot blocked for the foreseeable future. Minutes are taken at all Functional Team meetings with a copy forwarded to the Re-engineering Steering Committee.

Program Variations
Each Functional Team is aware of inherent differences among clinical programs, but is not ruled by those differences. Problems are identified as common to all organizational programs first, and then varied to accommodate program differences.

System Champion(s)
Each Functional Team has at least one member who can function as a "champion." Such a person (or persons) is knowledgeable in the technical aspects of the area(s) being reviewed by the Team, and serves as the ongoing technical consultant(s) to the Team. The role is critical, and if a given Functional Team's "champion" is no longer able to serve, a new "champion" is assigned.

Technologies, Documentation & Training
Each Functional Team identifies the technologies, documentation and training requirements for successfully implementing its recommendations.

Monitoring & Management
Each Functional team identifies those processes required to monitor and manage its recommendations. Specific measures, audit procedures, types of reporting required, and other indicators are addressed.

Policy & Procedure Development
Finally, each Functional Team develops policies and procedures that outline the processes and methodologies to be used by staff in support of the Team's recommendations. Those policies and procedures are reviewed by the Re-engineering Steering Committee for consistency with the work performed by other Functional Teams.

Clinical Decision Making & Documentation Team
Defining clinical decision-making and documentation requirements in a consumer-centered system involves more than just deciding what information will be captured. It also involves the way in which the information will be incorporated into service planning, and the role the consumer will play in the generation and review of the information.

In addition to the issues identified in the general guidelines for Functional Teams, the Clinical Decision Making & Documentation Team addresses (at a minimum) the following areas:

Admission,Assessment & Other Clinical Information
Much of the information about consumers is captured during the admission process. The Functional Team reviews the information needs for admission, assessment and subsequent clinical processes, and develops procedures to ensure that the information is captured accurately, in a timely fashion, and in such a way that it can be used by clinical staff for making consumer-based decisions.

Treatment Planning
The Functional Team defines its treatment and discharge planning needs and reviews the organization's treatment planning models to determine the most appropriate ways to use information, including consumer outcomes data.

Clinical Records
The Functional Team reviews those legal, regulatory and ethical issues relating to the development and maintenance of an automated clinical record. Recommendations are then made regarding the most appropriate method to support the effort. Specific issues to be covered include topics such as HIPAA, the type and amount of user access, structure of the notes and timeliness of data entry.

Clinical Access & Confidentiality
The Functional Team recommends procedures for ensuring access to clinical information by appropriate staff. The Functional Team also identifies appropriate safeguards for ensuring the maintenance of confidentiality of consumer information.

Outcomes & Utilization Review Team
Consumer outcomes involves not only the identification of methods for handling outcomes and utilization review information, but also those issues relating to how the consumer is involved with the process. How is the information shared with consumers? What are the links to treatment and service planning? How can outcomes measurement techniques be kept as non-intrusive as possible with respect to the clinical process? These are only a few of the questions that should be considered.

In addition to the issues identified in the general guidelines for Functional Teams, the Outcomes & Utilization Review Team addresses (at a minimum) the following areas:

Treatment Outcome Models & Requirements
The Functional Team identifies models for measuring and reporting consumer outcomes from the Ohio Mental Health Consumer Outcomes System. Specific data requirements for supporting those models are identified.

Utilization Review
The Functional Team identifies approaches, staffing requirements and information needs for creating and supporting a true utilization review process.

Consumer Financial Eligibility & Authorizations Team

The role of the Consumer Financial Eligibility & Authorizations Team is to ensure that the organization has established and formalized procedures for ensuring that all services provided to consumers are as fully reimbursable as possible. In a consumer-centered system, people responsible for consumer financial eligibility and authorizations also need to be sensitive to issues with consumers, their life situations, and needs. They need to be trained and supported in those areas, to avoid the all-too-common trap of staff who are "unmindful" of consumer needs.

In addition to the issues identified in the general guidelines for Functional Teams, the Consumer Financial Eligibility & Authorizations Team addresses (at a minimum) the following areas:

Consumer Contact Point Operations

The Functional Team establishes procedures for the operations of initial consumer contact points (e.g., waiting room, telephone contact). The Team identifies the degree to which centralized scheduling will benefit the organization, the tasks to be performed by front desk personnel, the nature of consumer telephone contact, and what data are required for those functions.

Capture of Initial Financial Information

The Functional Team defines those procedures and system definition requirements for ensuring that all appropriate financial liability information is captured for consumers without creating barriers to consumer Recovery. The Functional Team establishes the process whereby timely and reliable information is captured and maintained (i.e., who collects the information, how it is monitored, who updates it).

Benefits Verification

Benefits verification takes at least two forms: (1) initial recording of an individual consumer's benefits; and (2) the ability to review upon demand the remaining benefits a consumer has before specific reimbursement eligibility ceases. The Functional Team identifies the information requirements of each, including who has need for access to the information.

Initial Service Authorizations

Some services require prior authorizations in order for reimbursement to occur. The Functional Team identifies procedures for capturing such authorizations at the time the consumer initially presents to the organization.

Ongoing Service Authorizations
Service authorizations can change during the course of a consumer's treatment, and different processes may be required for maintaining ongoing authorizations than were appropriate for obtaining initial authorizations. The Functional Team identifies procedures for capturing such authorizations.

Service Authorization Monitoring
The Functional Team identifies the process whereby the status of service authorizations will be monitored so that subsequent authorizations can be obtained as appropriate. The Team identifies staffing and system functions required.

Consumer Financial Services Team
The Consumer Financial Services Team is responsible for identifying and formulating solutions for dealing with those issues related to the consumer's (or the consumer's third party payors') financial liability for services provided by the organization. As was the case with the Consumer Financial Eligibility & Authorizations Team, people responsible for consumer financial services need to be sensitive to issues with consumers, their life situations, and needs. Everything from how statements are formatted to how consumer questions are handled on the telephone should be included in the review .

In addition to the issues identified in the general guidelines for Functional Teams, the Consumer Financial Services Team addresses (at a minimum) the following areas:

Financial Counseling
Consumers should have as complete an understanding as possible regarding their financial responsibilities. The Functional Team defines those procedures and system definition requirements related to the consumer financial counseling role.

Consumer Accounting
The Functional Team defines those procedures and system definition requirements specific to the consumer accounting function. The Functional Team identifies "consumer-friendly" procedures for responding to queries about financial responsibilities.

Billing & Accounts Receivable
The Functional Team defines those procedures appropriate to the accurate and timely production of service billings, and the subsequent application of payments and tracking of accounts receivable.

Contracts Management Team

Reimbursement for the organization's services is controlled for the most part by external contracts. The Contracts Management Team is chartered with the responsibility of ensuring that such contracts are appropriately defined within the organization's infrastructure. Helping the consumer understand how his or her services are reimbursed can also be critical to the recovery process, and as is the case with all other Functional Teams, consumer input and feedback should be considered carefully.

In addition to the issues identified in the general guidelines for Functional Teams, the Contracts Management Team addresses (at a minimum) the following areas:

Contract Costing & Marketing

Contract costs are critical the marketing of services. The Functional Team identifies methods for determining costs of services provided under individual contracts and providing that information to individuals responsible for marketing the organization's services to outside parties.

Contract Analysis & Definition

Once contracts for reimbursement are identified, they must be tracked such that fees can be correctly assigned. The Functional Team identifies staffing and procedures for analyzing contracts in a timely and efficient fashion.

Executive Information Team

The organization requires a wide variety of reporting to provide managers and decision-makers with the information it needs for effective management. In a consumer-centered organization, much of the information will relate to how the consumer fares, and not simply on what the organization did. Combined with traditional organizational management reports, consumer-centered reporting provides important information for the management of consumer care, the improvement of the service delivery system, and accountability for public resources.

The Executive Information Team identifies the general approach to be used in developing high-level decision-making tools for management.

Implementing the Ohio Consumer Outcomes System in a Culturally Competent Context

A Summary of Four Projects to Identify Perceptions of the Ohio Mental Health Consumer Outcomes System Among Representatives of Diverse Communities

Funded by the Ohio Department of Mental Health through the federal Center for Mental Health Services Block Grant

Acknowledgements
In publishing this report, ODMH recognizes the many provider agency and board staff who have devoted their time and energy to developing an effective implementation strategy for the statewide Outcomes System. We will never know what sacrifices they have made personally and in their own workplaces to support this effort. But we can hope that their work will be a service to other local systems that will find the products useful in supplementing their own implementation efforts. We are, however, certain that the Outcomes System as a whole would be lacking in its integrity, value and local flavor without their active participation.

In particular, we would like to acknowledge the following people and organizations for their contributions to the many educational products created through these grants: Michael Flora, Susan Keckler, Renee Kopache, Thomas Lambric, Gary Mercer, Joyce Semeraro, Ellen Stukenberg and Ron Woodward.

THE FOLLOWING PEOPLE CONTRIBUTED TO THIS MONOGRAPH:

Rural/Appalachian
Southern Consortium for Mental Health Services
Athens, Hocking, Vinton ADAMHS Board
Lesli Johnson, Ph.D., Senior Project Manager and Evaluation Specialist Institute for Local Government and Rural Development (ILGARD), Ohio University.
Diane Pfaff, Research Associate and Primary Author, ILGARD, Ohio University

Hispanic/Latino
Richard Njoku, Ph.D., Cuyahoga County CMH Board
Sara Loue, Ph.D., Department of Epidemiology and Biostatistics, Case Western Reserve University, Consultant

African-American
John Myers, Ph.D., Trumball Lifelines, Trumball County ADMAHS Board
Cliff O. Johnson, consultant, Warren, Ohio

Amish
Diane DeRue, The Counseling Center of Wayne and Holmes Counties, Wooster, Ohio
Lawrence Gresca, Department of Anthropology, Case Western Reserve University, Cleveland
Jill Korbin, Department of Anthropology, Case Western Reserve University, Cleveland
Beth Matthews, Geauga County ADMAHS Board, Chardon, Ohio
John Myers, Ph.D., Trumball Lifelines, Trumball County ADMAHS Board
Karen Podojil, Ravenwood Mental Health Center, Chardon, Ohio

TABLE OF CONTENTS

Forward 116

Introduction 117

Limitations of the Study (ies) 121

Methodology (ies) 123

Substantive Findings 127
- General Findings 128
- Cultural and Language Issues 128
- Service System Implications 130
- The Role and Application of Technology 131
- The Interpretation and Use of Data 132

Summary 133

Appendix A: General Implications for the Outcomes System .135

FORWARD

Ohio's mental health system has a substantial and respectable history of leadership in the area of cultural diversity and, most recently, cultural competence. Many resources are available to assist local systems in establishing a culturally competent system, and there are several agencies and local systems that are models in this regard. Unfortunately, however, these are the exception rather than the rule, and cultural competence is too often viewed as a valuable enhancement, rather than a basic necessity for local systems. (A similar charge might be leveled at state systems, as well.) This report underscores the fact that cultural competence guidance aimed at effective administration of the Outcomes System is only a subset of the larger issue of system cultural competence. One reviewer noted that,

> "...system barriers include MACSIS, claims billings, systems that are unwilling to pay for co-therapy/co-interventions, and the lack of flexible service categories that could support non-traditional interventions. Our institutionalized warys of doing business are loaded with racism; yet we continue to give lip service to cultural competency."

It will be of little benefit to develop a culturally competent Outcome implementation plan if consumers and families are not also offered culturally competent services, supports and opportunities to participate meaningfully in local system management. Similarly, it will be of little benefit to develop a culturally competent outcomes implementation plan unless ODMH and boards are willing to make significant administrative, operation and procedural changes to support provider efforts to be culturally competent.

INTRODUCTION

It is a truism that we are all more similar than we are different. People everywhere seek much the same kinds of sustenance, support and success regardless of age, race, creed, gender, ethnicity, geography, or other defining characteristic. In Ohio, a preliminary survey found no significant differences among the *kinds of outcomes* that Ohio consumers sought to achieve when compared by race and ethnicity. [1]This conclusion helped form the basis of the ODMH decision to seek a standard, statewide approach to measuring consumer outcomes, a decision that was later validated by the Outcomes Task Force (Vital Signs, 1998). Of course, it is also true that there are generally more differences *within* a group than between groups. One reviewer emphasized, for example, that "Hispanics are an incredibly heterogeneous group," and that there are also significant generation differences within these sub-groups, all of which produce variations in cultural focus. This suggests that even the general recommendations included in this report must be tempered by local knowledge of specific cultural groups and the particular individuals involved.

While cultural characteristics may affect consumers' desired outcomes only marginally, these characteristics can influence how receptive and responsive consumers are to the services they are offered, based on the sensitivity and competence with which they are offered. Many local systems have figured out how to tailor their programs and train their people to be sensitive and responsive to the unique individual and community characteristics of the people they serve. Advocates report that consumers served by these systems are better able to advocate for themselves, have more satisfaction with the services they receive and participate more actively both in their own services and in the local system's decision process. It has yet to be seen whether their outcomes are better, as well. In the best settings, consumers and families find "seamless" processes and staff who are comfortable and competent with a wide range of consumer and community characteristics. In these settings, we should be able to predict that consumers and families will willingly complete Outcomes Surveys and act as partners with providers in using the information to shape a course of treatment.

On the other hand, it should come as no surprise that consumers and families who are treated with disrespect, rudeness, insensitivity and disregard for or hostility toward their race, gender or other characteristics will be less likely to view the agency as helpful. They may not participate actively in the services offered, might drop out of services prematurely, or might engage in disruptive behaviors to express their unhappiness. In all likelihood, they will not directly state that they are dissatisfied. In this, they will act not so much differently from

[1]Unpublished study, Ohio Department of Mental Health, 1996.

people with no psychiatric disability, who recognize that they are in a relatively powerless position and will have to act compliant to get even a modest amount of service. In these settings, it will be a challenge to gain active participation in the Outcomes System and to overcome the common suspicion that the data meets only the needs of administrators.

Third, any Outcomes Measurement System will only be as effective as its use of data. Throughout the development of the Outcomes System, consumers and families have seemed to understand implicitly that the effort to measure their outcomes has merit. This comment has been typical:

> "Now we have a voice. They are asking us what we think is important, or what we think works, rather than just asking if what you say we need is working."

Even the most valid, reliable and culturally sensitive survey will be useless if the data is not put to use for the improvement of quality at all levels: fostering Recovery, improving treatment planning, supporting program development, and informing funding, marketing and communications about mental health and mental illness. In doing so, we must also be very cautious to not develop incentives and disincentives at any level of the system based on outcomes data before we understand and appreciate the subtleties and complexities inherent in the data. We must all have confidence that any use of data has been preceded by the appropriate, thoughtful analysis and reflection that will build, rather than undermine its credibility. In any case, the successful use of data will be influenced by the attitudes expressed and the actions taken by system represenatative. One staff member put it this way:

> "It's hard for us to convince our clients to (participate in Outcomes Surveys), if we don't think it's worthy. If I go in with a negative attitude, I have to watch that, you know, because you relay that to them and they think the same thing."

In the process of deciding to recommend a single, statewide package of outcomes instruments, the Outcomes Task Force struggled mightily with issues around the differences between culturally defined groups. These concerns can be grouped into two categories. First, members of the Outcomes Task Force noted forcefully that consumers from varied demographic categories would not

all respond similarly when approached to complete surveys. Members noted, for example, that African-American consumers might react with suspicion to questions of such a personal nature, especially if queried in an impersonal manner or in an environment perceived to be unfriendly.

Second, members noted that some of the content of the survey questions might be alien, at best, or insulting, at worst, to consumers from some cultures. Members noted, for example, that Amish consumers might find the "individual empowerment" questions at odds with their cultural values of community and deference to male and church authority. Others noted that traditional African-American community values rely heavily on family and church for support and even for what might otherwise be considered "mental health services" such as conunseling. For these communities, the quality of life measures might make less sense thatn for others who have no extended support system. Similarly, members observed that survey content might eventually need to be modified to accommodate the clinical status and needs of older adults, people with co-morbid conditions and by gender.

As a result of these observations, the final recommendations of the OTF (Vital Signs, 1998) included the following:

- Develop an outcomes strategy for culturally diverse populations and older adults, and for persons with co-morbid conditions, especially mental illness and substance abuse.

- Conduct data analysis by consumer clusters, including but not limited to cultural/racial, gender and age distinctions.

- Include cultural sensitivity concerns in the process and product evaluation of the Outcomes System.

Subsequently, ODMH funded four grants to local systems to study the implementation of the Outcomes System in the three largest culturally diverse[2] communities in Ohio (Hispanic/Latino, African-American, rural/Appalachian) and in one community where there was a high likelihood of some survey content being considered irrelevant or inappropriate (Amish). The first three of these grantees were asked to study consumer perceptions of the Outcomes System and to identify strategies for ensuring that the System be implemented in a culturally

competent manner, especially with regard to communications, training and use of data to support Consumer Recovery. In addition, the recipients of the Amish grant were asked to explore issues with the actual survey items.

This report is a consolidation of the four reports (including a very preliminary report on the Amish grant). In general, the reports simply verify the direction in which Ohio's Mental Health system has been trying to move for two decades. They suggest specific strategies that might be helpful in developing a culturally competent Outcomes implementation plan, **but these really tread little new ground. They underscore the work already underway to develop training programs and build incentives to increasing the cultural competence of local systems.**

The grantees were asked to study the acceptability of the Outcomes System, and to generate recommendations for making the System as acceptable as possible to all cultural groups. ODMH anticipated recommendations related to best practices in administering and communicating about the System, as well as using the data to support consumer recovery. Ultimately, grantees found that it was impossible to separate this question from the nature of the survey items. Therefore, the studies generated a substantial body of recommendations about the survey items. For the moment these must be considered separately from the implementation recommendations, because ODMH has committed to retaining the instruments without revising the items for three years (until no later than September, 2004). This decision flowed from strong local feedback during both the OTF and the Pilot that frequent revisions to the instruments would cause significant disruptions and would jeopardize their ongoing participation. A commitment to holding the instruments stable for three years would reassure local systems, at the cost of sacrificing *(temporarily)* the system's responsiveness to particular issues such as those raised in this report.

In the interim, the Department and local partners are keeping track of issues related to survey items which will be included in an Outcomes System evaluation process that will be launched as soon as feasible. Many recommendations that were generated in the current process have been recorded in the Appendix as "General Implications for the Outcomes System." As a group, they are highly suggestive of the kinds of cultural issues that have been and continue to be raised in implementing the Outcomes System, and readers are encouraged to use them as a reference in building in the specific elements of cultural competence locally.

LIMITATIONS

The consolidated findings from these four reports should be read with several qualifications in mind.

- Each study interviewed a small number of consumers, families and system representatives. While their comments can be considered a helpful baseline, they cannot be considered to reflect the full range of concerns that might exist in local systems.
- The small budget for each study constrained the scope, depth and duration of the studies.
- Being qualitative in nature, these studies were not designed to compare one group against another, and so cannot be considered conclusive. Rather, they were designed to identify the kinds of concerns that people might be likely to express and so must be considered suggestive of concerns deserving further exploration locally and statewide.
- Local data has not yet started flowing to ODMH, so there is no way to as certain at the state level whether the identified concerns are reflected in differences in the data profiles between groups. This kind of data analysis will be conducted as soon as enough data has accumulated to build a database that represents the population as a whole.
- Any guidance about cultural competence must be filtered through and tempered by the specific characteristics and needs of individuals, rather than imposed based on abstract conceptions of culture. Ultimately, applying this information must be practiced as an art, rather than as a science. At its best it can uplift and inspire both consumer and provider toward the common objectives of healing and recovery.

LIMITATIONS continued...

As noted earlier, the individual studies were based on relatively small samples of consumers, families and individual providers, ranging from a substantial number in the rural/Appalachian focus area to a modest number in the Hispanic area. Therefore, the conclusions must be considered preliminary, and the recommendations must be understood as contingent on further exploration. We must continue to study the dynamics of cultural competence (and the lack thereof) and the implications it has for the evolving Outcomes System. On the other hand, qualitative methods such as these are commonly used to begin to understand a phenomenon and to begin shaping a strategy for further study. This is entirely consistent with the established practices of system partners who have participated in the development, piloting and implementation of the Outcomes System. We expect changes and enhancements to be needed over time, and we will proceed as the data suggests, in partnership with local systems.

METHODOLOGY (IES)

All four grantees used some combination of key informant interviews and focus groups as the source of data. The participants included consumers, families and individual providers. Focus group and key informant interview outlines are available on the Outcomes website as appendices to each of the individual reports. Following is a brief summary of each grantee's approach.

Rural/Appalachian

- The report notes that no strong evidence was found for distinguishing how rural and Appalachian consumers might respond to being asked to participate in the Outcomes System that would be different from their non-rural counterparts. Because of the limited exposure consumers have yet had with the System, this remains an open question that would be useful to explore further. The report recommends that, to fully study this issue, demographic items should include questions on the birthplace of consumers and their parents because geographic location is not necessarily the same thing as cultural background. Many persons who live in Appalachia do not have a history and cultural ties to the region, and many persons raised in Appalachia have moved to urban centers and would be missed in a purely geographic demographic database. Similarly, rural and Appalachia are not equivalent; flat land rural and rural hill country are different.
- Eight focus groups were convened with board staff, agency case managers and consumers. Open-ended telephone and/or face-to-face interviews were conducted with fifteen individuals (administrators, providers and consumers).
- Contact with consumers and families and case managers was limited because systems were in the early stages of implementation.
- The initial focus of the study was on administrative processes. Participating boards and agencies were recruited through the Southern Consortium for Rural Care and Richland County to present the rural perspective. Later, once implementation began, additional boards and agencies were recruited to gather the case manager and consumer experiences.
- Original participants were from Athens-Hocking-Vinton, Gallia-Jackson-Meigs, Richland and Columbiana boards; later participants were from Ross, Pickaway, Fayette, Pike, Highland, Licking, Knox, Stark and Richland counties as well as the Public-Private Solutions (PPS) group of boards (Delaware-Morrow, Fairfield, Crawford-Marion, Licking-Knox and Paint Valley).

- Focus group and interview questions were formulated based content in the Outcomes Implementation Planning Checklist.
- Both focus groups and interviews focused on knowledge of the Outcomes System, planning for implementation, local collaboration, technology issues, barriers and opportunities for using the outcomes data for service improvement, and additional support needed for successful implementation.
- The report identifies "best practices" demonstrated by local systems in the areas of planning, technology, and information utilization.

Hispanic/Latino

- Three consumer focus groups were convened, including two male and 16 female consumers.
- Consumers represented diverse ethnic backgrounds: Puerto Rican, Mexican, El Salvadoran, and Guatemalan.
- Ten providers participated in two provider focus groups.
- Interviews were conducted with four key informants.
- Key informants were identified by providers and/or consumers.
- Eligibility criteria included high visibility in and familiarity with the Hispanic communities and the mental health systems of Cuyahoga and Lorain Counties, and identification by consumers and/or providers.
- Consumers and providers were located in both Cuyahoga and Lorain Counties.
- Consumers were recruited through providers by placing flyers in prominent locations.
- Eligibility criteria included self-reported Hispanic ethnicity and current receipt of services from a mental health provider.
- Consumers were paid $20.00 for their participation and refreshments were provided; providers were offered refreshments only.
- The focus group questions covered basic knowledge of the Outcomes System, questions about how best to gather their opinions, how understandable the surveys were, ideas about cultural issues in interpreting the data, gaps in the survey, cultural problems with information asked and information not asked, and opinions about the expected and ideal use of data.

African-American

- Consumers, families and service providers were identified through contract agencies in Trumbull County.
- Modified focus-group interviews were conducted, including consumers, families, providers, and African-American community leaders.
- Sessions included completion of the Adult A instrument by paper and pencil.
- Twenty providers participated, including administrators, supervisors and direct care workers; eight of these were African-American.
- Interviews were conducted with 18 African-American community leaders: 14 were from Trumbull and Mahoning counties and the remainder were from Lucas and Franklin counties.

Amish

- Participants were from Amish settlements in Wayne and Holmes counties and in Geauga Settlement that is located in parts of Ashtabula, Portage and Trumbull counties; these are reported to be the world's largest and North America's fourth largest Amish settlements, respectively.
- Participants were recruited through existing service networks in these areas.
- Study activities with providers and service recipients included structured conversations and completion of a questionnaire regarding the Adult A instrument; conversations were also held with community leaders.
- Conversations focused on the purpose of measuring consumer outcomes, concerns about who has access to the data and how it will be used, the potential role of support groups in Amish settlements.

The Amish grant is structured around the Amish church hierarchy and leadership. These key community members are being educated about the Outcomes System and are being asked to allow the researchers access to consumers and families. These men control access to the settlements both formally and informally; without their participation it would be virtually impossible to gain the participation of community members.

The Amish grant bears particular mention in light of the delayed timeframe. The grant program did not gain momentum until early fall, 2000, by which time it became apparent that the change in seasons and the resulting loss of daylight would become a major obstacle to data gathering. Over the late fall

and winter, the grantees began to make contact with designated bishops in individual Amish communities, but it was extremely difficult to find mutually agreeable times to meet. Many Amish in Northeast Ohio work in furniture factories and other employment locations during the day and return at night to farms lit only by kerosene and candles; visitation after dark was not an option. It became clear that the bulk of the data gathering would have to occur in the warmer, lighter months of the spring and summer. Thus, this document has only a very preliminary report to draw from and must be considered somewhat speculative. However, the speculation itself is based on sound commentary from the bishops and from providers who work with Amish communities, so it is considered quite reliable, and probably predictive of the responses of community members.

SUBSTANTIVE FINDINGS

Major Findings: Issues and Recommendations for Implementation in Local Systems

This section reflects both areas of commonality and the areas of difference between the four studies. It is grouped into subject areas according to issues raised by participants and/or suggested by interviewers. Three points should be remembered while reviewing these findings. First, there is anecdotal evidence and information from unrelated works that other cultural groups, such as Asian-American and Native American Indian, will respond similarly to many of the findings listed below. There will also be differences, and it will require additional exploration to discover the commonalities and differences among all the cultures represented in Ohio.

Second, since these studies were not conducted with comparisons to European-American populations, it is too early to say whether these same findings apply across the board to consumers and families regardless of culture. It should be obvious that all people wish to be treated with dignity and respect, to be provided services that are acceptable and available, and to achieve a place in their community that affords economic, social and psychological security. Direct care staff who operate from these assumptions have the basic attitudes necessary to begin to *develop* cultural competence. For them to succeed in achieving cultural competence will require taking what a reviewer called the "long road" which includes at least effective training, supervision and self-reflection.

Finally, the reports contained many findings that do not relate specifically to the question of culture. These include issues such as resource limitations, policies and priorities, communication and training within the mental health system, and intergovernmental relations. A summary of these is located in Appendix A, and these will be taken into consideration as implementation continues statewide.

General Findings

- Participants are generally supportive of the effort to measure consumer outcomes, as long as other implementation issues are resolved — see below (All).
- Many participants are unclear about meaning of "outcomes," the need for consumer outcomes information, and how the data would be useful to consumers and families (Amish, African-American, Rural).
- Participants have concerns about who has access to the information and how it will be used (Amish, Hispanic, Rural).
- Outcomes implementation provides an opportunity to develop consumer and family support groups where they do not already exist (Amish).
- The Adult A survey is "too long," especially when administered by paper and pencil; consumers with significant disabilities may have difficulty remaining focused (African-American, Rural).

Cultural and Language Issues

- A trusting relationship is the foundation for a successful therapeutic alliance; the absence of such a relationship will make it difficult to gain willing participation of consumers and families, no matter what other accommodations are made (All).
- There is reluctance to rate survey items on the negative extreme due to the cultural value of politeness (Amish).
- There are "reservations" as well as objections about the appropriateness of many Adult A items, especially related to the Empowerment scale items; English; some terms do not translate readily into Spanish. Some idiomatic English expressions have no parallel in some other cultures (Hispanic, Amish), and some terms are simply irrelevant. For example, it was observed that “city hall” is a generational term that has been supplanted, especially by males, by the term “The Man”. (African-American)
- Some terms are difficult to understand, even for those proficient in English; consumers with limited literacy will need more assistance to complete the surveys (All).
- Part I of the Adult surveys is perceived as too personal and sensitive for the beginning of the survey and many consumers will simply refuse to respond or not answer honestly; these items will impair the desired tone of trust and cooperation (African-American, Hispanic, Rural).

- Personal contact and communication is essential in establishing and maintaining trust between consumers and families and service system personnel (Rural); a higher value is placed on relationships than "things" (Amish, Hispanic, African-American).
- Limited literacy in English or Spanish, or both, is perceived to be intimidating and shameful and must be accommodated tactfully; literacy should be considered when choosing how the survey will be administered. (Rural, Hispanic, African-American).
- The absence of "street language" may alienate some consumers, especially young people (African-American).
- Very significant differences exist between the cultural interpretations of Hispanic, African and mainstream American society. For example:
    - the Empowerment scale's emphasis on individual liberty and self-expression is directly contradicted by cultural values that emphasize obligation to and reliance on family and community (Amish, Hispanic, African-American);
    - questions about the number of friends in one's life is viewed as under-emphasizing the qualitative value and importance of family and friends;
    - questions about "free time" fails to recognize the importance of meeting obligations to family and community and the implication that free time equates with failing to meet these obligations;
    - questions about feeling comfortable asserting oneself raises concerns about being perceived as defying the dominant authority of the church and/or male family and community members;
    - questions in the Empowerment scales about standing up to authority raise issues about cultural patterns of response by marginalized peoples to authority figures, including officials, police, elected officials, as well as provider staff.

Service System Implications

- Providers should base their actions on an actual assessment of the individual's cultural identity, characteristics and needs (African-American).
- The Outcomes System represents a "paradigm shift" for local systems in how to view the nature of their work; to increase acceptability of the system by case managers and consumers will necessitate immediate feedback on the survey measures to use in treatment planning (Rural).
- Assessment of and training for cultural competence should be a regular feature of all local service delivery systems; providers should be aware of potential cultural differences (All).
- Provider agencies will need to assess when consumers cannot adequately complete surveys on their own, and provide personal assistance tactfully; this may mean literally reading every item aloud; care will need to be taken to accurately reflect the meaning of the item (Hispanic, African-American, Rural).
- People from diverse communities will tend to fear expressing dissatisfaction, or even showing unsatisfactory outcomes, in order to avoid confrontation with authorities; providers must work within a trust-building context; they must reassure consumers and families that the data will be kept confidential and will not be used to deny services; providers must continually demonstrate how the data can be used to improve services and Consumer outcomes in as much as consumer satisfaction is intended to be a bellwether for problems at a provider or in a system, consumer satisfaction and outcomes surveys should be separated administratively with former completely anonymously. (Rural, African-American, Hispanic).
- These same measures must be taken to overcome the sense of shame and stigma about mental illness (Hispanic).
- Surveys should not be completed in waiting rooms, because these are perceived as impersonal and as invading one's privacy (Hispanic).
- It will generally be helpful to have services provided by individuals of the same cultural background as consumers; occasionally this will be essential to achieve a trusting relationship; when it is not possible to do so, providers must be trained and receptive to adjustments and accommodations (African-American).

The Role and Application of Technology

- Paper and pencil may be the main data entry technology, but other electronic options may also be acceptable, especially for youth (Amish).
- It would be ideal for consumers and families to have a choice among data entry options; any approach will need to be evaluated and alternatives offered for individuals with particular strong preferences or specific limitations (African-American, Rural).
- A face-to-face interview is the preferred mode of administration; paper and pencil may be acceptable and would be preferable to a computer-based or mechanical/electronic option (Hispanic).
- Interactive Voice Response (IVR) technology is the overwhelming choice of rural systems, primarily because of cost-efficiency, synergy with the existing satisfaction survey approach and accessibility to remote residences (Rural).
- Some consumers and families will refuse to cooperate with data entry technologies due to "intimidation" with the technology, "suspicion" about where the data will flow, and alienation with an impersonal versus a face-to-face interaction (Hispanic).
- Phone data-entry technologies are perceived to be the height of impersonality and to increase suspicions abut who is on the other end of the line and what will happen to the data (Hispanic).

The Interpretation and Use of Data

- Differences in culturally defined meaning of terms (see above) creates a significant challenge in interpreting the meaning of responses. It will be important to establish norms for different cultural groups so that cultural groups so that culturally determined behaviors are recognized as such and not misinterpreted.

  For example:

  - Men will tend to underreport symptomatology as a reflection of the cultural value on appearing strong and reliable (Hispanic, African-American, Rural).
  - Women will score low on measures of empowerment as a reflection of the cultural value of deference to male authority (Hispanic, Amish).

- The absence of survey questions related to spirituality and religion in general, and the role of fate, in particular, is perceived as a major omission that makes it confusing for consumers to respond and impairs the validity of the survey overall (Hispanic, African-American).
- More information than age is needed to identify the cultural orientation of consumers; it is essential to know whether they were raised within the specific culture (i.e. born and/or raised in another country) or raised within and acculturated to the dominant U.S. culture (Hispanic, African-American).
- Participants were highly sensitive to the absence of "context" in the surveys, and concerned that information could be easily misinterpreted without a deeper appreciation for the particular situation (Hispanic).
- There are concerns that data will be interpreted with a cultural bias. For example, non-African-Americans tend to see drugs and alcohol as a primary diagnosis and mental health as a secondary diagnosis while African-Americans tend to reverse the emphasis.
- Funders and regulators must be very cautious about developing administrative measures (incentives, disincentives) based on early interpretation of the data; as the OTF and Pilot groups both stated, the data should be used only for purposes of quality improvement for the foreseeable future.

SUMMARY

These reports suggest several important conclusions that have implications at all levels of the Mental Health System. First, the critical role of direct care staff cannot be overemphasized. While boards and ODMH have supporting roles — leadership, funding, training — it is only in the face-to-face interaction between a consumer or family member and the case manager or clinician that cultural competency comes to life. If there is one consistent message in these reports to "take home," it is that a trusting relationship with strong rapport must exist before consumers will share personal information with candor and participate actively in the process of managing their care. The options for direct care settings are limited only by the sensitivity, creativity and caring of agency staff. Even on the first visit there are concrete actions that a staff member may take that will set the desired tone of the interaction, even if deep rapport must await further interaction. After all, grandma was right that first impressions are lasting.

Second, these reports suggest that significant cultural differences exist between groups of consumers, perhaps to the point that the validity of the adult instrument, in particular, is called into question. At the very least, the reports suggest that more effort needs to be focused on two specific areas as implementation of the Outcomes System proceeds: careful data analysis to sort out and understand the meaning of the data for these populations, and either revision of or development of alternate versions of the instruments. This latter suggestion raises the prospect that we will eventually have to judge whether we have a basis for statewide comparison of Outcomes data. If the answer is "no," we will have to decide on whether we care more about validity or statewideness.

Finally, as noted earlier in this document, it will not be sufficient for local systems to implement Outcomes measurement in a culturally competent manner. It is, of course, the specific goal of this document to foster culturally competent implementation of the Outcomes System. However, to have the desired impact of engaging and retaining consumers through an effective course of recovery, it is necessary for local systems to fulfill the promise of an entire culturally competent system. One reviewer prodded us on this point:

> "Do we just want 'cultural awareness' classes offered to direct service workers, or do we want an overhaul on how our system responds to persons who don't fit the mold of an obedient, passive client? We are finding out through the recovery movement that awareness training once or twice a year for half a day does not impact the changes we want to see in a local system."

SUMMARY continued...

We hope that some local systems will take up the challenge posed by implementation of the Outcomes System to institute comprehensive systems change around cultural competence. Asking providers to be culturally competent in one or another context is what a reviewer called a "band-aid" approach that ultimately fails. We consistently hear from consumers and families and from research studies that such an approach fundamentally misses the point — it is like wearing sunscreen only when the temperature is above 90 degrees, or only being kind when the mood strikes. It would be equally short sighted to ask a provider to think about Recovery only when offering diagnostic services, but not when considering employment options.

One reviewer recommended the development of a template or manual for system changes around cultural competence that would make it possible for local systems to follow an established program. At the same time, and even with such a "template," the challenge of cultural competence is to transcend manualized approaches and to infuse all aspects of the service system with the values and practices that make it a reality. Ultimately, it will take successful, guided experiences to convince system personnel of the value of this approach.

APPENDIX A

General Implications for the Outcomes System

The reports included many findings that relate more to the Outcomes System and implementation as a whole than to cultural issues in particular. This list summarizes the major findings. These will be used, as appropriate, to develop guidance and technical assistance resources for local systems, to evaluate the Outcomes System after implementation and to inform the work of data analysis and data use.

- Consumers are generally positive about the endeavor to measure and use outcomes, but want to be sure the information is used to improve services and help them achieve desired goals.
- The evaluation stage must take into consideration issues related to literacy, language and culture that have implications for survey items and design.
- In many cases, but not all, consumers and families have not been informed nor involved in local implementation planning; in some cases this may be an artifact of the sampling methodology, but in some it is a clear decision to involve only administrators at this point.
- Board and agency administrators are similarly positive, but are concerned about overall cost, integration with other ODMH-initiated activities, effective use of aggregate data, and relationship to local priorities.
- Staff are concerned about administrative burden and are looking for relief, especially through revision of Certification Standards.
- Rural systems are especially challenged by lack of resources, including MIS personnel, hardware and software; one report suggests a "best practice" that achieves economies of scale and synergies between activities.
- Many of those interviewed were at the beginning stages of planning for implementation and they presented numerous concerns questions; one report suggested that it will take time to determine which of these concerns are well-founded, and which will resolve successfully as implementation proceeds.